CATALOG 2006

STCC LIBRARY
3 8132 0002 7405 7

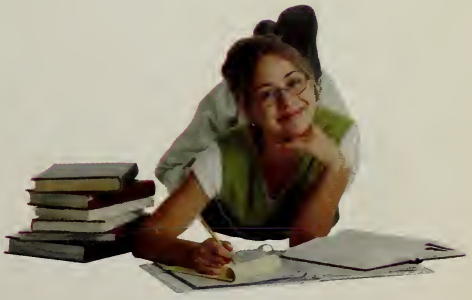

There is an exciting future waiting for you . . .
and our College gives you the education to get there.

Springfield Technical Community College

Springfield Technical Community College

One Armory Square, Suite 1, P.O. Box 9000, Springfield, MA 01102-9000
413-755-3333 AdmissionsInfo@stcc.edu www.stcc.edu

Mission Statement

Springfield Technical Community College, a leader in technology and instructional innovation, transforms lives through educational opportunities that promote personal and professional success.

Vision Statement

Springfield Technical Community College will be the leading edge educational solution for workforce, community, and innovation.

STCC LIBRARY
ONE ARMORY SQ
SPRINGFIELD, MA 01102

TABLE OF CONTENTS

General Information 6
Admissions Information 19
Financial Information 27
Veterans' Information 38
Academic Information 40
Student Information and Services 60
School of Continuing Education 91
Center for Business and Technology 93
Curricula of the College 94

DEGREE AND CERTIFICATE PROGRAMS
Arts, Humanities, and Social Sciences 96
Law Enforcement/Criminal Justice 99
Law Enforcement Certificate 100

Business and Information Technologies 101
Business Administration 102
Accounting 104
Finance 105
Management 106
Marketing 106
General Business 107
Transfer Compact Option 108
Entrepreneurship Option 109
Information Technologies 110
Computer Information Technologies 110
Computer & IT Security Option 111
Microcomputer Specialist Option 112
Programmer Option 113
Web Programming Option 115
Web Programming Certificate 116
Microcomputer Specialist Certificate 116
Programmer Certificate 117
Health Information Technologies 118
Medical Coding and Billing Specialist 118
Medical Coding/Billing Specialist Certificate 120
Office Information Technologies 121
Office Information Tech. - Executive Option 122
Medical Office Information Technology Option 124
Comp. Soft. Applications Specialist Option 125
Clerical Office Assistant 126
Computer Applic. Spec. Certificate 127
Microsoft Office Certificate 128

Engineering Technologies 129
Automotive Technology 130
Civil Engineering Technology 132
Architectural Technology Transfer Option 133
Architectural Technology Certificate 135
Construction Management Option 136

Construction Management Certificate 137
Computer Systems Engineering Technology 138
Digital Media Production 139
Teleproduction Technology Option 140
Multimedia Technology Option 141
Electrical Engineering Technology 142
Electrical/Robotics Technology Certificate 143
Electronic Systems Engineering Technology 143
Electronic Systems Technology Certificate 145
Energy Systems Technology 145
Heating/Ventilation/Air Conditioning Certificate 147
Fire Protection and Safety Technology 147
Fire Science Certificate 148
Graphic Arts Technology 149
Commercial Art Option 150
Digital Photography Option 150
Graphic Arts Technology Certificate 151
Desktop Publishing Certificate 152
Landscape Design and Management Technology 152
Transfer Compact Option 154
Landscape Design & Management Certificate 155
Laser Electro-Optics Technology 156
Mechanical Engineering Technology 158
Computer-Aided Drafting Certificate 159
Computer-Aided Manufacturing Certificate 160
CAD/CAM Certificate 161
Telecommunications Technology 162

Health 164
Interdisciplinary Health Studies 166
Clinical Laboratory Science 167
Clinical Laboratory Assistant Certificate 169
Cosmetology 170
Dental Assistant 171
Dental Hygiene 173
Diagnostic Medical Imaging 175
Nuclear Medicine 175
Radiography 177
Sonography 179
Integrative Health Care 181
Massage Therapy 181
Medical Assistant 182
Medical Assistant Certificate 184
Nursing 186
Rehabilitation Therapies 189
Occupational Therapy Assistant 189
Physical Therapist Assistant 191
Respiratory Care 193
Surgical Technology 196

Liberal Arts Transfer and General Studies 200
General Studies 201

Commonwealth Transfer Compact Option 203
University Without Walls Transfer Option 204
Pre-Health Options 206
Health Aide Certificate 207
Pre-Engineering Technologies Option 208
Pre Engineering/Science Transfer Option 208
Pre-Business/Information Technology Option 209
Pre-Law Enforcement Option 209
Bilingual Program Option 210
Non-Matriculating Option 210
Liberal Arts Transfer 211
Liberal Arts Transfer Option 211
Fine Arts Option 212
Teacher Education Transfer Option 213

Math, Science, and Engineering Transfer 217
Engineering and Science Transfer 218
Engineering Transfer Option (Chemical, Civil, Electrical, Environmental, Industrial, Mechanical Engineering) 220
Computer Science Transfer Option 221
Technical Engineering Option 222
Science Transfer Option
Biology Option 224
Pre-Medical/Pre-Dental/Pre-Veterinary Option 225
Chemistry Option 226
Mathematics Option 227
Physics Option 228
Technical Engineering Certificate 228
Biotechnology 229
Biotechnology Manufacturing Certificate 231

COURSE DESCRIPTIONS
Course Descriptions by Subject 234

DIRECTORIES
STCC Board of Trustees 376
Massachusetts Board of Higher Education 377
Administrative Directory 378
Department Chairs/Program Coordinators 380
Administration, Faculty, and Professional Staff 381
Part-Time Faculty and Professional Staff 394
Clinical Faculty 399
Course Index 405
Directions to STCC 420
Campus Map 421
General Index 423
Policies and Disclosures ..... inside back cover

President's Message

Welcome to the STCC community, a gathering of distinguished faculty, supportive staff and diverse students. Here you'll find a wide variety of opportunities for academic and personal enrichment, and for success.

As the only technical community college in Massachusetts, STCC offers a variety of career programs unequalled in the state if not in New England, to prepare for employment in health and engineering technologies and business. Many area employers depend on STCC graduates; they often tell us they could hire even more graduates than we have available.

Others of our students transfer on to four-year institutions, close to home and some of the most prestigious colleges in the country. There's a UMass office on campus to assist students who are transferring to the university.

Making new friends with fellow students is a rich college experience here, where students in your class may come from your own high school or neighborhood, or from another country, ranging from Armenia to Zambia.

Our beautiful campus is situated on 35 acres of the Springfield Armory National Historic Site. The campus Green is the site of events such as the welcoming student picnic, or home games for our soccer teams, as well as for civil engineering technology students practicing surveying, day care children playing, or students using laptops with wireless access.

The college's location in the heart of Springfield brings you other benefits. We're very close to the wealth of attractions of the city library and museums. As a member of the Cooperating Colleges of Greater Springfield, STCC offers its students access to courses at other nearby colleges. We recently established joint admission agreements with three of those colleges — AIC, WNEC, and Bay Path — which may assist you in completing a bachelor's degree.

There are opportunities for leadership, through participation in Shared Governance, student goverment, the many student clubs and organizations on campus, the student newspaper, or as the student member of the STCC Board of Trustees.

The 2005 Lady Rams, NJCAA Division III National Champions

Our athletic program is outstanding, with nationally-ranked players on the wrestling, basketball, golf and other teams. And our women's soccer team just won the NJCAA Division III national championship.

Cultural opportunities offered on campus include the Amy H. Carberry Fine Arts Gallery, the Gallery Players drama society, diversity forums organized by student government, and initiatives such as the recent visit by Tibetan monks sharing their culture to promote healing and world peace. Our Ovations program, celebrating its 10th anniversary, brings artists, novelists, poets, dancers, and musicians to perform for the STCC community and to talk with students about careers in the arts.

As a national leader in entrepreneurship education, STCC offers you an associate degree program, an Honors course in Entrepreneurship: Concept to Commercialization, and a chance to test-drive your own business in the Student Business Incubator. STCC itself is entrepreneurial, as probably the first community college in the country to be affiliated with a Technology Park.

For a supportive college environment, a rich cultural mix of students and faculty, a strong academic foundation for a bachelor's degree or a professional preparation for a career, and a unique historical location, we're proud to present a great educational institution. Welcome.

Dr. Ira H. Rubenzahl,
President
irubenzahl@stcc.edu

General Information

OVERVIEW

Founded in 1967 on 35 acres of the Springfield Armory National Historic Site,STCC has graduated 27,699 men and women, approximately 85% of whom continue to live here and contribute to the economic viability of this region. The vast majority of our students come from the Greater Springfield area, although many students are drawn from other parts of Massachusetts or from adjoining states, by the college's wide range of academic offerings.

Students: STCC's student body is diverse in age, race, ethnic and cultural background, and educational background.

- Enrollment for fall 2005 is 5823 students
- 52% of students, taking day or evening classes, are under 25 years of age
- 58 % of STCC's students are female
- 46% of STCC's students are enrolled in a full-time course of study (12 credits or more) 54% are taking a part-time schedule
- Of the 5371 students who reported ethnicity for fall 2005, 65.4% are White, 15.3% Black, 16.4% Hispanic, 2.5% Asian, and .4% American Indian.
- In fall 2005, 581 of our students were born in another country. They may be here temporarily for their education, or be permanent residents of the United States, non-permanent residents, or even U.S. citizens.
- Most of our students come to STCC with a high school diploma; however some students have already completed bachelor's degrees, or in rare cases master's degrees or even doctorates, before turning to STCC.

Career programs:

- STCC is known for its career programs in health, engineering technologies, and business, one of the widest selections offered by a community college in New England.
- Advisory boards of area professionals help guide departments in presenting the latest concepts and skills.
- STCC's virtual hospital, one of the largest installations of patient simulation units at a community college in the U.S., provides invaluable experience for health students in interacting with patients in widely varying situations.
- Several academic programs are unique in this region. For example, Laser Electro-Optics Technology, the Robotics focus of Electrical Engineering Technology, Massage Therapy, Nuclear Medicine, and others draw students regionally as well as locally. The Automotive Technology program is one of only two Ford ASSET programs in New England.
- STCC was selected by the National Science Foundation in 1995 to establish the National Center for Telecommunications Technologies, disseminating telecommunications curriculum nationwide.

- STCC is the lead college in the 11-college Verizon New England Next Step program, providing telecommunications training for Verizon employees in the six-state region.
- Other national corporations such as Microsoft, Cisco, and IBM have partnered with STCC. Intel Corporation has supplied scholarships and internships for students in the Electrical Engineering Technology program, and has hired several graduates.

Transfer programs:

- STCC is also a transfer institution, providing a solid foundation for a baccalaureate degree. Graduates transfer to a wide variety of four-year institutions, most often locally to Westfield State College, UMass, American International College, Elms College, and Western New England College, but often to colleges in other regions or states.
- Articulation agreements with many four-year colleges ease the academic transition of STCC graduates into the junior year of specific programs. New joint admission programs with local colleges also assist in transfer.
- Graduates of the Engineering & Science Transfer program are prepared for further study toward a degree in engineering science, pre-med, biotechnology, or other disciplines. Rensselaer Polytechnic Institute offers a significant annual scholarship, and many students go on to the UMass School of Engineering.
- Graduates of Liberal Arts Transfer may continue their degree at colleges including Smith College or Mount Holyoke, as well as other area institutions.
- Business students often transfer to AIC, UMass, WSC, or WNEC.
- While most students transfer from the three programs described above, other programs also offer a transfer preparation or opportunities, such as the General Studies program, Architectural Technology Transfer, the Electronic Technology cluster, Civil Engineering Technology, Landscape Design and Management. Nursing and other health students may go on to the baccalaureate level or beyond.

Faculty and Staff:

- 168 of STCC's faculty are full-time. Our part-time faculty include clinical faculty who guide health students in their practicum experiences at area hospitals and medical centers, and other healthcare facilities

Economic development:

- Because of the college's many career programs, as well as the computer and professional development workshops offered by the Center for Business and Technology, STCC is a major source of trained employees for business and industry throughout the region.
- In addition to being a regional resource in workforce development, the college helps fuel the area economy through the STCC Technology Park, apparently the first in the nation affiliated with a community college. Through attracting tenant companies, job creation, salaries, tax revenues, and the purchase of

goods and services, the Park pumps several million dollars into the local economy each year.

- The Springfield Business Incubator in the Scibelli Enterprise Center guides and accelerates the growth of new businesses. The SEC currently houses nine businesses and five regional support organizations. High school and college students in the Student Business Incubator learn the basics of being a business owner.
- STCC's leadership in entrepreneurship education includes the founding of the National Association for Community College Entrepreneurship, assisting other colleges across the country in helping to grow small businesses.

HISTORY

Springfield Technical Community College is located on the 55-acre Springfield Armory National Historic Site. In 1789, George Washington selected this site on the bluff overlooking the river for the nation's first arsenal; the Springfield Armory was established in 1794 by an Act of Congress. The land had been used as a training field for militia since the 1600s, and by the 1780s was a major ammunition depot. In January of 1787 Daniel Shays led his ill-fated rebellion down the Bay Path, now State Street, attempting to capture the military stores in protest of heavy taxes following the Revolutionary War, an event which led to the adoption of the U.S. Constitution.

In its 174-year history, Springfield Armory was the center for research, development, and manufacture of most of the small arms that American soldiers depended on, including the legendary Springfield Rifle and the M1 Garand. Manufacturing innovations at the Armory and its skilled workers spread throughout the Connecticut River Valley, creating a region known for precision manufacturing. After World War Two, production decreased at the Armory, and in 1964 the decision was announced to phase out the historic installation.

In that same year, Springfield Technical Institute was established by the City of Springfield on the grounds of the former Trade High School, and was operated jointly by the Springfield School Committee and the Massachusetts Department of Health, Education, and Welfare. The Institute was flooded with more applications than it could handle in a limited space, and the plans to decommission the Armory provided a solution.

In the summer of 1967, STI moved into three buildings on the Armory grounds, and opened in September under the jurisdiction of the Massachusetts Board of Regional Community Colleges. In April, 1968 the Armory was officially closed, and in August of that year, the Institute's name was changed to Springfield Technical Community College.

An initial enrollment of 400 students and a faculty of 20 began what is now one of most comprehensive community colleges in the Commonwealth, serving an increasingly diverse population.

Today, the grounds are shared by the federal and the state government. The 20 acres under the jurisdiction of the National Park Service contain the Armory Museum and the former commanding officer's quarters. The remaining 35 acres comprise the campus of STCC, a combination of old brick buildings, the oldest dating to 1808, and modern structures of classrooms and labs. The campus is surrounded by a distinctive iron fence cast in the mid-1800s from old cannon.

GOVERNANCE

In 1947 the Massachusetts Board of Education determined that the Commonwealth should establish a system of community colleges, and in 1958, the Massachusetts Board of Regional Community Colleges was created to oversee the master plan for the development of this system. There are now 15 Massachusetts community colleges, of which STCC was the 12th one established.

On March 1, 1981, the Massachusetts Board of Regents of Higher Education assumed responsibility for all the Commonwealth's public institutions of higher education. That function is now served by the Massachusetts Board of Higher Education.

On March 1, 1981, the Springfield Technical Community College Board of Trustees was created, replacing the STCC Advisory Board. Together with the Mass. Board of Higher Education, the Board is the governing body of the College. The eleven-person Board of Trustees includes one member representing the alumni of the College, and one student member elected each year by the student body.

SHARED GOVERNANCE

Shared governance was instituted at STCC in 1998 through a vote of all college employees, replacing the All College Council which was instituted in 1977. A quality team on shared governance began meeting in 1994 and drafted a constitution which was discussed at an open meeting, voted on, revised, and then ratified in February 1998.

The mission statement reads: "Shared governance contributes to the effectiveness of the college in meeting its stated mission and to the quality of life for members of its community. Through this shared governance, the college provides a vehicle whereby administration, faculty, staff, and students are able to communicate with each other and offer counsel regarding issues of campus life and the future of the institution. It is incumbent upon each constituency of the college community to value and ensure the integrity and effectiveness of shared governance."

The structure of shared governance includes a campus-wide town meeting which meets twice a semester and is headed by an elected shared governance coordinator. Five standing committees meet regularly, with chairs and members also elected by the college community. The standing committees are: Academic Services, Administrative Services, Business and Industry Services, Institutional Development, and Student Services. The Vice President who has oversight of each area is automatically a member of the relevant committee.

A coordinating committee refers items to the appropriate standing committee or to a quality team it creates. It also tracks and reports on the progress of each issue. This committee includes a representative of each standing committee, the president of the Student Government Association, the president of the college, a steward of the classified union and the president of the professional staff/faculty union, and is chaired by the shared governance coordinator.

Notices and minutes of meetings are published on the campus intranet. Decisions of the standing committees are made through the quality process and are forwarded to administration for action/implementation.

MISSION

Springfield Technical Community College, a leader in technology and instructional innovation, transforms lives through educational opportunities that promote personal and professional success.

To this end, STCC is committed to:

- Fostering inquiry
- Embracing diversity
- Respecting an open exchange of ideas
- Encouraging leadership
- Inspiring creativity and serving the future with a caring faculty and staff

VISION

Springfield Technical Community College will be the leading edge educational solution for workforce, community, and innovation.

VALUES

All college employees and students should exemplify, in their words and actions, the basic principles of honesty, respect, fairness, and accountability.

PHILOSOPHY

Springfield Technical Community College strives to meet the changing needs of the community through the commitment of its faculty, administration, staff, trustees, and students. We believe that the College must assist students in their choice and preparation for careers; encourage performance to meet the highest professional standards, and provide opportunities for continuing educational and professional enrichment. At the same time, the College strives to develop and foster an understanding of scholarship through the liberal arts and sciences.

Education contributes to the quality of life and living. It is accomplished through efforts to develop in students the capacity for critical thinking, the ability to communicate effectively; an appreciation of the arts, sciences, and humanities; and an understanding of the technological basis of modern society. The College recognizes the need for students to deal with the rapid pace of change and such global concerns as those related to environment, population, and international relations.

Springfield Technical Community College aims to assist in the development of people who are educated in mind, sensitive to ethical concerns, responsive to civic and social obligations, capable of adjusting to change, and able to respond creatively to the demand of their chosen careers.

ACCREDITATION

Springfield Technical Community College is accredited by the New England Association of Schools and Colleges, Inc., a non-governmental, nationally recognized organization whose affiliated institutions include elementary schools through collegiate institutions offering post-graduate education.

Accreditation of an institution by the New England Association indicates that it meets or exceeds criteria for the assessment of institutional quality periodically applied through a peer group review process. An accredited school or college is one which has available the necessary resources to achieve its stated purposes through appropriate educational programs, is substantially doing so, and gives reasonable evidence that it will continue to do so in the foreseeable future. Institutional integrity is also addressed through accreditation.

Accreditation by the New England Association is not partial, but applies to the institution as a whole. As such, it is not a guarantee of the quality of every course or program offered, or the competence of individual graduates. Rather, it provides reasonable assurance about the quality of opportunities available to students who attend the institution.

Inquiries regarding the status of an institution's accreditation by the New England Association should be directed to the administrative staff of the school or college. Individuals may also contact the Association:

Commission on Higher Education
New England Association of Schools and Colleges
The Sanborn House, 15 High Street
Winchester, Massachusetts 01890
(617) 729-6762

The College is approved by the Board of Collegiate Authority, Massachusetts Department of Education; by the Massachusetts Rehabilitation Commission; by the United States Office of Education for listing in the Directory of Higher Education; for the National Defense Student Loan Program; for federal assistance from any unit of the Department of Health, Education, and Welfare; by the United States Veterans Administration for the admission of veterans and war orphans; by the United States Department of Justice as a place of study for non-immigrant students; and by the United States Internal Revenue Service as a non-profit organization.

Individual programs in the School of Health are accredited as follows:

Clinical Laboratory Assistant	
National Accrediting Agency for Clinical Laboratory Science (NAACLS)	2/04-10/07
Clinical Laboratory Science	
National Accrediting Agency for Clinical Laboratory Sciences (NAACLS)	2/01-4/08
Dental Assistant	
American Dental Association (ADA) Commission on Dental Accreditation	1/99 to 2005
Dental Hygiene	
American Dental Association (ADA) Commission on Dental Accreditation	7/98 to 2005

Diagnostic Medical Sonography
- Joint Review Committee on Education in Diagnostic Medical Sonography (JRCDMS) 1/04 to 2009
- Commission on Accreditation of Allied Health Education Programs (CAAHEP)

Massage Therapy
- Commission on Massage Therapy Accreditation (COMTA) 2003-2008

Medical Assistant
- The American Association of Medical Assistants' Endowment (AAMAE) 10/98 to 2005
- Commission on Accreditation of Allied Health Education Programs (CAAHEP)

Nuclear Medicine
- Joint Review Committee on Educational Programs in Nuclear Medicine Technology (JRCNMT) 10/98 to 2005

Nursing
- National League for Nursing Accrediting Commission 1998 to 2006
- Mass. Board of Registration in Nursing

Occupational Therapy Assistant
- The Accreditation Council for Occupational Therapy Education (ACOTE) of the American Occupational Therapy Association (AOTA) 8/01 to 2010/11

Physical Therapist Assistant
- Commission on Accreditation in Physical Therapy Education of the American Physical Therapy Association (APTA/CAPTE) 5/98 to 2006

Radiography
- Joint Review Committee on Education in Radiologic Technology (JRCERT) 11/00 to 2003 + extension site visit 2006

Respiratory Care
- Committee on Accreditation for Respiratory Care (COARC) 11/97 to 2006
- Commission on Accreditation of Allied Health Education Programs (CAAHEP)

Surgical Technology
- Accreditation Review Committee on Education in Surgical Technology (ARC-ST) 4/95 to 2001, extended indefinitely
- Commission on Accreditation of Allied Health Education Programs (CAAHEP)

CERTIFICATION RESULTS

Certification exam results for the Class of 2004 in the School of Health:

Program	Grads	# Taking exam	# passing	% passing
Clinical Lab Assistant	9	5	4	80
Clinical Lab Science	4	3	3	100
Cosmetology	28	25	25	100
Dental Assistant	7	4	3	75
Dental Hygiene	17	17	17	100

Diagnostic Medical Sonography	9	5	5	100
Massage Therapy	10			no exam
Medical Assistant (A.S.)	9	11	5	40
Medical Assistant (Cert.)	8	7	7	100
Nuclear Medicine	5	5	4	80
Nursing	61	61	49	80
Occupational Therapy Assistant	4	4	4	100
Physical Therapist Assistant	6	4	4	100
Radigraphy	16	16	13	81.2
Respiratory Care	5	5	5	100
Surgical Technology	8	3	3	100

STCC TECHNOLOGY PARK

An innovative partnership of business and education has become a powerful tool for economic development in Western Massachusetts. On October 1, 1996, the STCC Assistance Corporation acquired a 15.3-acre site directly adjacent to the campus and created the Springfield Technical Community College Technology Park. According to the Wall Street Journal (9/16/98) "The school may emerge as the most powerful magnet to draw more technology-dependent companies to this region." In recognition of its achievements, the Economic Development Administration of the U.S. Department of Commerce awarded STCC the 2001 Award for Excellence in Urban Economic Development. And the International Economic Development Council selected the STCC Technology Park for its 2002 Excellence in Economic Development Award, in the category of a Revitalization Program.

Key elements of the STCC Technology Park include:

1.) Resident companies
Many technology-based businesses are located here through a unique leasing arrangement. A major attraction for these companies is the synergy with STCC as a source of highly skilled students and graduates as interns and employees, as well as the availability of expert training and consulting services.

2.) The Andrew M. Scibelli Enterprise Center (SEC), consisting of the Springfield Business Incubator, the STCC Entrepreneurial Institute, the Student Business Incubator, and the S. Prestley Blake Venture Center, addresses some of the critical needs of Western Mass. in new business growth, an expanded job market, and better opportunities for economic self-sufficiency.

3.) The Joseph J. Deliso Sr. Videoconferencing Center in the SEC provides state-of-the-art videoconference services to area businesses who appreciate the many advantages of holding meetings by videoconference rather than incurring the costs in time and money to send personnel to various parts of the country or the world.

4.) The National Center for Telecommunications Technologies

5.) The Verizon New England Next Step Program

6.) The Technical Applications Center of STCC's Mechanical Engineering Technology program

NATIONAL CENTER FOR TELECOMMUNICATIONS TECHNOLOGIES

Through a $3 million award from the National Science Foundation, STCC is the National Center for Telecommunications Technologies (NCTT), one of only 16 Centers for Excellence in Advanced Technological Education across the country, and the only one developing a state-of-the-art program in telecommunications as a model for use throughout the United States. In this continuing project, STCC is the leader of a collaboration among four-year colleges, community/technical colleges, high schools, industry partners, and several government agencies.

Through an additional $1.6 million grant in 2003, NCTT is establishing a series of regional partner centers throughout the country.

Through this consortium, NCTT is working to accomplish a set of specific goals:

1.) Design curriculum for an educational pathway leading students from high school through community college and to a BSET or BS in Engineering degree. This pathway is based on developing student competency in skills the industry partners know will be needed in their workforce. Curriculum is developed in the areas of photonics, networking, and wireless communications.

2.) Create materials such as CD-ROMs, videos, multimedia presentations, and traditional instructional materials to be used by instructors teaching NCTT curriculum.

3.) Develop state-of-the-art instructional delivery mechanisms such as virtual labs, telepresence and Internet courses available at www.nctt.org.

4.) Attract and recruit qualified high school students into the telecommunications educational pathway and support the critical prerequisite skills in math, science and technology.

NEW ENGLAND NEXT STEP PROGRAM

Through an multi-million dollar contract with Verizon, STCC is the lead institution, overseeing the operation and administration of the 11-college New England Next Step program, educating Verizon employees in telecommunications technology. The Next Step mission is to provide an innovative, educational, skill-based, associate in applied science degree program that will enable Verizon workers to stay current with advancing technology, understand changing marketplace realities, and gain enhanced customer service skills. Employees attend class one day a week for eight semesters. The first class graduated in June, 2000.

ANDREW M. SCIBELLI ENTERPRISE CENTER

The Scibelli Enterprise Center opened on October 5, 1999 in the STCC Technology Park. It includes a business incubator, the STCC Entrepreneurial Institute, and other offerings to stimulate new business growth.

Springfield Business Incubator

PricewaterhouseCoopers, as well as other economic development specialists, recognize small business incubators as a method of starting and establishing local businesses. Businesses "incubated" during their critical start-up years with assistance and guidance succeed at twice the rate of those that do not receive such support. Incubators that draw on the resources of a higher educational site

manager are among the nation's most successful. The Scibelli Enterprise Center is a 37,000 square foot building offering customized leases at an affordable rate with shared services, network-ready space, and pro bono business consulting services.

The Center includes a business library, business development plan evaluations, access to a built-in network of business professionals, technical assistance and training support by STCC faculty and staff, and access to several reigonal business funding and assistance agencies.

The Joseph J. Deliso Sr. Videoconferencing Center, located in the SEC, offers state-of-the-art videoconferencing services to area businesses.

The Western Massachusetts Entrepreneurship Hall of Fame inducted its first honorees in October, 2000. The Hall of Fame annually honors area entrepreneurs, past and present, whose vision, creativity, and community involvement will serve as an inspiration to future generations of entrepreneurs contributing to the economic development of Western Massachusetts.

STCC Entrepreneurial Institute

The Entrepreneurial Institute at STCC provides entrepreneurship education and student business incubation for student entrepreneurs who seek start-up or growth knowledge and information. The institute is a lead agency in supporting entrepreneurship education outreach and program delivery in the K-14 educational pipeline.

The Entrepreneurial Institute runs the Entrepreneur for a Day program for elementary school students, a middle school after-school program, the YES! (Young Entrepreneurial Scholars) program for high schools throughout the region, the Community Foundation of Western Massachusetts Student Business Incubator, the EYE (Excellence in Youth Entrepreneurship) program for under-served urban youth, and the S. Prestley Blake Student Venture Center for accelerated student business incubation.

A one-stop center for entrepreneurship education for over 2,500 individuals each year, the Entrepreneurial Institute assists in the development and delivery of entrepreneurship education for present and future entrepreneurs. Partnerships with area colleges and universities, school departments, national entrepreneurship organizations, successful area entrepreneurs, and business support organizations offer tremendous opportunities for students to explore entrepreneurship and student business incubation as they move through their educational pathways.

COOPERATING COLLEGES OF GREATER SPRINGFIELD

The Cooperating Colleges of Greater Springfield is an educational consortium composed of the eight public and private colleges in the Greater Springfield area: American International College, Bay Path College, Elms College, Holyoke Community College, Springfield College, Springfield Technical Community College, Western New England College, and Westfield State College. Founded in 1971, the organization fosters the sharing of programs, talents, and facilities, to bring to this area the educational resources of a university while retaining the initiative and vitality of independent institutions.

Through cooperative planning at the presidential level and the functioning of committees from different administrative levels, CCGS aims:

- to enrich the educational offerings, cultural events, and social activities of the colleges,
- to offer a wide variety of programs and fields of study to students at each institution,
- to effect fiscal economies and to eliminate unnecessary duplication through joint planning, and
- to develop into an economic and educational resource to the Greater Springfield community.

Examples of the different levels on which the colleges meet and cooperate are committees composed of the presidents, the deans of faculty, the deans of students, the librarians, the public relations directors, the continuing education directors, and the student activities directors, among others.

I. *Presidents*

The presidents speak with a united voice for higher education in the Greater Springfield area through their monthly meetings, and support area-wide projects for community development, through such organizations as the Education Opportunity Center, and the Chamber of Commerce.

II. *Academic Exchange*

Cross registration has been established so that in each semester or term, any CCGS student attempting at least six semester hours in a degree program may enroll at another college for any regular-term course in the day division that is not offered at his or her own institution, as long as the desired course is not over-subscribed. This cross-registration policy does not apply to continuing education (evening, weekend, and summer) courses at STCC. The last day for CCGS students to register is the last day of add/drop. The student is billed by his or her home institution. Study at the host institution is scheduled as part of the student's normal credit load, and all records for such academic achievement are kept by the registrar of the student's home college. Grades earned in CCGS exchange courses will be reflected on the transcript of the home institution and calculated into the QPA. This cross-registration includes an Army ROTC program, and an Air Force ROTC program. For more information on the Army ROTC program, call Western New England College at 782-1345; for information on the Air Force ROTC program, call the University of Massachusetts at 545-2451. The academic deans also sponsor faculty development conferences with nationally-prominent speakers.

III. *Libraries*

All students, faculty, and staff of the CCGS colleges can borrow many materials from the member libraries. A valid college ID with library barcode is needed to check out materials. Librarians in CCGS (along with the Springfield City Library) have compiled a list of magazines, journals, and newspapers owned by the member libraries and other libraries in western Massachusetts. There is a link to this list on the STCC homepage. See http://library.stcc.edu or http://clgsus.spfldcol.edu. For more information, see the section in this catalog on the Library.

IV. *Student Activities*

The Student Activities directors meet to discuss jointly sponsored educational, cultural, and social programs. The member colleges open some of their extracurricular events to all CCGS students. Events scheduled at individual

institutions may be publicized among the member colleges; in this way, programs which a single institution might not be able to attract are made available.

STCC FOUNDATION

The Springfield Technical Community College Foundation is a not-for-profit corporation which is fiscally and organizationally separate from the College. Funds received by the Foundation are used to advance STCC and to encourage and support its students and programs. The Foundation's objectives include raising funds from private sources to provide scholarships and other kinds of support services for which funds are needed.

The Anthony M. Scibelli and the Joseph J. Deliso Sr. Endowed Chairs are presented annually by the STCC Foundation Board to recognize and foster faculty excellence. The $3,000 awards are distributed as one half in cash award to further professional pursuits and one half in grant for the recipient's department.

PROFESSIONAL DEVELOPMENT CENTER FOR FACULTY AND STAFF

The Professional Development Center for Faculty and Staff is located in Quarters 8 and is used for the development of classroom teaching techniques, small group training for web design and distance learning, meetings of committees and quality teams, and informal and formal workshops for faculty and staff. The Center supports the exchange of ideas between and among faculty and staff, and utilizes the people resources that contribute to the student-centered environment on the STCC campus. The Professional Development Center for Faculty and Staff is an outgrowth of the work of the Quality Team on Learning and Teaching.

STATEMENT ON RACIAL, ETHNIC, AND RELIGIOUS HATRED

Springfield Technical Community College condemns any deliberate action which promotes racial, ethnic, or religious hatred. We believe that such hatred undermines the goals of education and efforts to build a more just and humane society.

POLICY IN SUPPORT OF PLURALISM

Students, faculty, staff, and visitors must be free from conduct that has the purpose or effect of interfering with an individual's academic or professional performance and creating an intimidating, hostile, or demeaning educational or employment environment. As such, the College has a policy of unequivocal condemnation of ethnic, religious, cultural, or racial intolerance, whether it be based on any of the aforementioned, handicap status, sex or sexual orientation.

POLICY CONCERNING SEXUAL HARASSMENT

Sexual harassment of a student, an employee, or any other person in the College community is unacceptable, impermissible, and intolerable.

Sexual harassment is a form of sex discrimination. It occurs in a variety of situations which share a common element: the inappropriate introduction of sexual activities or comments into the work or learning situation. Sexual harassment may involve relationships of unequal power and contain elements of coercion, as when compliance with requests for sexual favors becomes a criterion for granting work,

study, or grading benefits. However, sexual harassment may also involve relationships among equals, as when repeated sexual advances or demeaning verbal behaviors have a harmful effect on a person's ability to study or work in the academic setting.

For general purposes, sexual harassment may be described as unwelcome advances, requests for sexual favors and other physical conduct, and expressive behavior of a sexual nature when (1) submission to such conduct is made either explicitly or implicitly a term or condition of an individual's employment or education; (2) submission to or rejection of such conduct by an individual is used as the basis for academic or employment decisions affecting that individual; or (3) such conduct has the purpose or effect of substantially interfering with an individual's academic or professional performance and creating an intimidating, hostile, or demeaning employment or educational environment.

Such behavior is expressly forbidden by federal and state regulations, and recent action by the federal government has established that such behaviors are actionable under provisions of Title VII of the 1964 Civil Rights Act and the provisions of Title IX of the1972 Educational Amendments.

In keeping with these regulations, a concerted effort will be made to protect employees, students, and others from sexual harassment as defined.

COMMUNITY NOTIFICATION OF WHERE TO ACCESS SEX OFFENDER INFORMATION

In accordance with federal law, STCC is required to advise the campus communitywhere information concerning regstered sex offenders may be obtained. Information concerning Level 2 and Level 3 offenders is available to the general public by contacting the Commonwealth of Massachusetts Sex Offender Registry Board, located at PO Box 4547, Salem, MA 01970-4547, (978) 740-6400, or the Springfield Police Department located on Pearl Street. Level 3 offender information is also available online at www.mass.gov/sorb. If you have any questions regarding access to sex offender information, please feel free to contact the college's Chief of Police, David Siano, at 755-4211.

Admissions Information

ADMISSION

Springfield Technical Community College encourages applications without regard to race, color, national origin, age, gender, religion, disability, or sexual orientation. Admission to the College requires a high school diploma or its equivalent. A student who does not have a high school diploma or equivalent may be admitted only with non-degree status, and will be ineligible for financial aid. (See Ability-to-Benefit Policy for further information.)

Every consideration will be given to any applicant who possesses a diploma without regard to the curriculum pursued in high school. The applicant should take note, however, of the numerous requirements demanded by specialized college programs (see Prerequisite page).

A high school equivalency diploma (General Education Development Test-GED) may be earned by passing tests administered by the College several times each year. Further information about the tests may be obtained from the Testing and Assessment Center.

Students are advised to carefully study special requirements that are established by the program into which they seek admission.

Some programs of the College require specific minimum scores to be achieved by the applicant on the Scholastic Aptitude Test (SAT1) of the College Entrance Examination Board.

HOME SCHOOLING POLICY

All home-schooled students without a high school diploma or GED are eligible to apply for admission to a degree or certificate program provided they have successfully completed an approved home school program in accordance with Massachusetts General Laws, or the laws of their home state. If a home-schooled student has not completed an approved home school program, then the student will not be eligible to enroll in a degree or certificate program until he or she has taken and passed a federally-approved Ability to Benefit test.

To determine whether a student has participated in an approved home school program, the student shall submit, with the application for admission, evidence that the home school program was approved by the student's school district's superintendent or school committee. Additionally, if the home-schooled student is under the age of compulsory attendance, which is 16 years old in Massachusetts, a letter from the student's school district's superintendent or school committee is required, stating that the student is not considered truant and would not be required to attend further schooling or continue to be home-schooled if the student has completed his or her home school program before the age of 16.

The college reserves the right to limit or deny enrollment of any student under the age of 16 in a course or program based on a case-by-case consideration of a variety of factors, including but not limited to: the student's maturity, life experience, placement test scores, prior education, course content, instructional methodology, and potential risks associated with participation in a particular course or program.

ABILITY-TO-BENEFIT POLICY

Students who have successfully completed their high school course requirements but have not passed the MCAS (Massachusetts Comprehensive Assessment System) test, nor received a GED, may still apply for admission to STCC's General Studies/basic studies program. Upon submitting an application for admission, applicants will be required to undergo an Ability-to-Benefit assessment test. Applicants must achieve the minimum score, as established by the U.S. Department of Education, in order to be admitted to the college. These students must obtain their high school diploma or GED (any equivalency as determined by the Massachusetts Department of Education) after completing 24 credit hours of college-level credit courses, in order to continue in a degree program and as a prerequisite to graduate from the college.

APPLICATION PROCEDURE

Students desiring admission to the College may obtain an application by calling or writing to the Admissions Office, Springfield Technical Community College, One Armory Square, Springfield, MA 01105. They may also apply online at www.stcc.edu. Students attending high schools in the Greater Springfield area may expedite the application process by asking their guidance departments for an application form. Applications should be filled out completely and returned to the STCC Cashier's Office as soon as possible. This application must be accompanied by a non-refundable application fee in the amount of $10 for in-state students or $35 for all out-of-state or foreign students in check or money order payable to STCC. This is a required fee which goes directly into the General Fund of the Commonwealth. It is each applicant's responsibility to ensure that an official transcript of his/her high school grades is sent to the STCC Admissions Office. The Admissions Office cannot accept the responsibility for obtaining transcripts. Any student who has been absent from STCC for seven years or more must re-submit transcripts and other credentials deemed essential by the Admissions Office.

Springfield Technical Community College maintains an open-door admission policy. However, the rapidly increasing number of applicants and the requirements of competitive programs necessitate early application for admission. Applicants should have their applications on file as early as possible, preferably before January 31 for the subsequent academic year. Applications received after January will be processed, and acceptance to desired programs will be based on available space.

In addition, official transcripts from all colleges previously attended must be submitted to the College. Applications cannot be processed until all transcripts, and SAT1 scores if required, are received.

APPOINTMENTS FOR INTERVIEWS

Although interviews are not required, applicants are encouraged to seek help with career choices by exploring various programs with the counselors and staff. Interviews and tours may be arranged by phoning or by writing the Admissions Office for an appointment.

OUT-OF-STATE AND INTERNATIONAL STUDENT INFORMATION

Because of the lengthened processing time, out-of-state residents, as well as all non-United States residents, must have all application materials complete and on file with the STCC Admissions Office prior to June 1 in order to be considered for admission to the fall semester (November 1 for admission to the spring semester).

Prospective students who are neither United States citizens nor in the United States on permanent visas must have taken the Test of English as a Foreign Language (if English is not the primary language spoken in their country) and have the test score entered as a part of their application for admission. Those who score below 525 on the TOEFL may enroll only for classes entitled English as a Second Language (ESL). Students applying for ESL courses only, are not required to take the TOEFL.

ENTRANCE ASSESSMENT POLICY

STCC is committed to the academic success of all entering students. The college develops an Entrance Assessment Review to provide every student with proper advising and to promote retention. The Entrance Assessment Review is used to evaluate student competency in reading, writing, and mathematics, and aids STCC students and advisors in planning an appropriate course of study. This testing is required before registering for classes. No credit is awarded on the basis of entrance assessments.

- All incoming day students matriculating in degree, certificate, or certificate of completion programs will complete the entrance assessment before registering for classes. If the results reveal a need for a stronger foundation in vital academic skills, students will be directed to appropriate developmental courses and support services.

- Students whose reviews indicate a need to further develop skills in reading, writing, or mathematics must complete appropriate developmental courses designated to prepare students to succeed in college-level programs. Completion of developmental coursework may extend the time required to complete a degree or certificate program.

Exemptions may apply to:

1. Students transferring equivalent college-level coursework into STCC from an accredited post-secondary institution; course transfer requires a grade of “C” or better.
2. English as a Second Language program students who will continue to participate in the ESL assessments.
3. Students having mathematics, English writing, and reading examination scores on STCC Entrance Assessment which are two years old or less.
4. Students who have completed coursework in English, reading, and mathematics at STCC, with a grade level of "C" or better.

Entrance assessments are administered by the Testing and Assessment Center located in Building 17, room 425. Questions should be directed to the Admissions Office at 755-4202 or the Assessment Center at 755-4709. Only the Admissions Office can grant exemptions.

READING POLICY

Students who place below 50 in the reading placement portion of the Accuplacer Computerized Placement Test (CPT) must successfully complete Reading I (DRDG-091) and Reading II (DRDG-092.) After having successfully completed Reading I (DRDG-091), students who score 68 or above on the Accuplacer CPT are exempt from having to take Reading II (DRDG-092.) Students who place between 51 and 67 on the CPT and who also place into DWRT-099 on the writing placement test must successfully complete Reading II (DRDG-092.)

IMMUNIZATION LAW

Chapter 76, section 15C of the General Laws of the Commonwealth of Massachusetts requires that ALL COLLEGE STUDENTS TAKING 12 CREDITS OR MORE, ALL STUDENTS IN A HEALTH FIELD, AND ALL STUDENTS ON A VISA must present a medical certificate indicating that they are immune to measles, mumps, rubella, tetanus, and hepatitis B in order to register for classes.

Any combination of three or more doses of DPT, DT, Td, is acceptable provided the last dose was administered within ten years. If not previously immunized, three doses are required. The time interval between the first and second doses is two months, with a third dose a year later.

Measles/Mumps/Rubella (MMR) vaccine is required if immunity is lacking for any one of these diseases. If vaccine is not given, TITRE must be done to prove immunity. Documented proof of MMR must be after January 1, 1966 for Massachusetts students, and after January 1, 1968 for non-Massachusetts students. Having had rubella, measles, or mumps disease does not prove immunity. It is required that all entering full-time college students should have TWO doses of live measles vaccine or a repeat MMR, the first dose being after 12 months of age.

Three doses of hepatitis B vaccine or proof of immune titre is needed to fulfill the hepatitis B requirement.

All students in the School of Health must be immunized against varicella or show proof of immune titre.

In addition, students in Health are required to submit documentation of a current Tuberculin Mantoux test. NOTE: If Mantoux test is (or has been) positive, a chest x-ray is required. Other tests may be required by clinical affiliations. All immunization requirements must be met for ENTRY or continuation in any clinical component.

TECHNICAL STANDARDS

The School of Health and the School of Engineering Technologies have established a set of specific technical standards which are required in the profession and which are necessary in order to affiliate in the clinical agencies and ultimately practice in the profession. It should be noted that under the Americans With Disabilities Act, "A qualified person with a disability is one who can perform the essential function of a job with or without reasonable accommodation."

The technical standards are not conditions of admission to a program of study. They reflect performance abilities that are necessary for a student to successfully complete the requirements of specified programs.

Prior to enrollment within these schools, each student will be required to sign and return a form indicating that he or she has read and understands the technical standards established for the specific program in which he or she is enrolling.

TRANSFER INTO STCC

Applicants who have had previous college experience must submit all college transcripts whether or not they are seeking transfer credit. In order to meet the residency requirements, a minimum of 15 credits required in the degree program must be taken at STCC to receive a degree. A second degree and/or certificate earned at the college also requires 15 separate and distinct credits in residency. The remainder may be taken at other institutions. Only courses in which the student has received a "C" grade or better and which are similar in content to those required in the student's program at STCC will be considered. For most general education courses there is no limit to the time elapsed between when the course was taken and when it is transfered to STCC. The exception is technical and/or science courses that may have specific time limits assigned.

DEPARTMENT/PROGRAM CHANGES

Students wishing to change their program or department should do so only after considerable thought and counsel. To initiate a program change, current students must obtain an Intra-College Transfer application from the Admissions Office.

Consultation with the faculty advisor, an admissions counselor, or the career counselor is recommended to ensure that prerequisites for admission to the new program have been satisfied, before submitting the application to the Admissions Office. The application should be submitted to Admissions no later than December 31 for the following fall term. Applications are reviewed by Admissions, and notifications of decisions mailed to students.

RE-ADMISSION

A student who has been dismissed for academic deficiencies may be readmitted by bringing his or her cumulative quality point average (QPA) to a minimum standard required by the College (See Academic Standing). A student who has attended summer or evening school and has raised the QPA to an acceptable level must complete an incoming student application.

FRESH START STATUS

The Fresh Start status is intended to address the needs of students who have had serious academic difficulties. Only students returning to STCC after a separation period of two or more years are eligible to apply for Fresh Start status. Fresh Start eligibility is limited to those students planning to complete a certificate or degree at STCC. Students who have already earned a certificate or degree at STCC will not be eligible for Fresh Start consideration. Students can be approved for Fresh Start status only once in their career.

Students must apply for Fresh Start status during their first semester matriculating after a separation. Applications are available in the Admissions Office. The Director of Admissions will determine eligibility.

All grades (passing and failing) previously awarded will continue to appear on the official STCC transcript, but will *not* be included in calculating the student's QPA.

Passing grades received prior to Fresh Start status may, with departmental approval, be used as credit toward the student's new degree program after the student has submitted the Intent to Graduate form.

Fresh Start status does not apply to financial aid. Financial aid recipients must be making satisfactory progress toward their degree, and their complete academic history will be reviewed when determining eligibility for aid.

CLEP AND CHALLENGE EXAMINATIONS—ADVANCED PLACEMENT

The College may award up to 45 credits to persons who successfully complete examinations in specific subject areas given at the College under the aegis of the College Level Examination Program (CLEP), or a series of Challenge Exams developed by the College.

The CLEP subject examinations cover a wide range of disciplines and allow applicants to demonstrate proficiency in areas where they have acquired knowledge through non-traditional learning situations. Credits earned through CLEP examinations allow the College to waive introductory courses which the student would normally be required to take. CLEP credits will be awarded by STCC if and only if the student is currently registered in a degree or certificate program at STCC.

The College has produced challenge examinations in subject-matter areas not found in the CLEP battery so that people who wish to demonstrate competence in specialized areas may do so. Students who feel that they possess above average competence in a subject area should not hesitate to consult the STCC Testing Coordinator at 755-4689 for further information, consultation and testing. CLEP and Challenge credits cannot be used to replace or improve a grade already on a student's transcript. Only students enrolled in degree or certificate programs at STCC are eligible to take Challenge Exams.

High scores on the Advanced Placement Examination of the College Entrance Examination Board will be evaluated by Admissions. Specific scores as approved by the College may allow the student applicant to be exempted from certain courses.

COMMUNITY CONNECTIONS

TECH PREP PROGRAM/2+2 ARTICULATION

STCC is a member of the Tech Prep 21 consortium, a partnership between the college and a number of secondary schools in the region. Through this program, high school students can begin exploring pathways to careers that require technical training at the community colleges, and are given the opportunity to visit area colleges to learn more about the programs that interest them. Staff at STCC work closely with high school faculty and guidance counselors to provide a smooth transition for students into their postsecondary program choices.

In addition, many students may be able to receive college credit for some of their high school courses under terms of 2+2 articulation agreements between the college and the high school.

Minimum Prerequisites for Admission

Program	Math	Science	Other Academic Area	Additional Requirement	Degree or Certificate Awarded	License or Affiliation Possible
Automotive Technology					Degree	
Biotechnology	Alg. 2 & Trig.	Bio.& Chem.*** Physics		SAT 1 *	Degree	
Biotech. Manufacturing					Cert. of Completion	
Business Administration	Algebra 2*				Degree	
Civil Engineering Tech.					Degree	
Architec. Tech. Transfer					Degree	
Architec. Tech.					Cert. of Completion	
Construction Mgmt.					Degree	
Construction Mgmt.					Cert. of Completion	
Clinical Lab. Science	Algebra 2	Bio. & Chem.***		SAT1 *	Degree	Nat'l. registration
Clinical Lab Asst.					Cert. of Completion	
Computer Information Technologies						
Option: Comp/IT Sec.	Algebra 2*				Degree	
Option: Micro. Spec.	Algebra 2 *				Degree	
Option: Programmer	Algebra 2 *				Degree	
Option: Web Program.	Algebra 2 *				Degree	
Info. Sys. Proc.	Algebra 2 *				Cert. of Completion	
Micro. Specialist	Algebra 2 *				Cert. of Completion	
Web Development	Algebra 2 *		CMPA-103		Cert. of Completion	
Webmaster	Algebra 2 *		PROG-109 & CMPA-103		Cert. of Completion	
Computer Sys. Eng. Tech.					Degree	
Cosmetology			Reading DRDG-092		Certificate	State license
Dental Assistant		Biology***	Typing		Certificate	ADAA Natl. Cert.
Dental Hygiene	Algebra 1, Geometry or Algebra 2	Biology & Chemistry***			Degree	ADA Natl.Bd. NERB State license
Digital Media Production					Degree	
Electrical Engineering Tech.					Degree	
Elec./Robotics Tech.					Cert. of Completion	
Electronic Sys. Eng. Tech.					Degree	
Electron. Systems					Cert. of Completion	
Energy Systems Tech.					Degree	state licnse, EPA cert., 2nd
Heat/Vent./Air					Cert. of Completion	state license EPA cert., 2nd
Eng. & Science Transfer	Alg. 2 & Trig.	Chem. & Physics***		SAT 1 •	Degree	
Option: Comp. Sci. Tran.	Alg. 2 & Trig.	Chem. & Physics***		SAT 1 •	Degree	
Option: Science Trans.	Alg. 2 & Trig.	Chem. & Physics†		SAT 1 •	Degree	
Technical Engin.					Cert. of Completion	
General Studies					Degree	

Program	Math	Science	Other Academic Area	Additional Requirement	Degree or Certificate Awarded	License or Affiliation Possible
Graphic Arts Technology						
Option: Commer. Art					Degree	
Option: Digital Photography					Degree	
Graphic Arts Tech.					Cert. of Completion	
Desktop Publ.					Cert. of Completion	
Landscape Design & Mgt.					Degree	
Land. Des./Mgt.					Cert. of Completion	
Laser Electro-Optics Tech.					Degree	
Law Enforce/Crim. Jus.					Degree	
Liberal Arts Transfer	Algebra 2*				Degree	
Option: Fine Arts	Algebra 2*				Degree	
Option: Teacher Educ. Trans.	Algebra 2*				Degree	
Massage Therapy	Algebra 2	Bio. & Chem.***	CMPA-103**** MAST-101****	SAT 1*	Degree	Municipal Lic.
Mechanical Eng. Tech.					Degree or Certificate of Comp.	
Medical Assistant	Algebra*	Biology*	MAST-101****	OFFS-100****	Degree	Nat'l. certificate
Medical Assistant	Algebra*	Biology*	MAST-101****	OFFS-100****	Cert. of Completion	
Med. Coding/Blling	Pre-Algebra				Degree	Nat'l. cert.
Nuclear Medicine	Coll. Alg. 2	Coll. Chem.***	MAST-101****	SAT 1*	Degree	2 Nat'l. cert.
Nursing	Algebra 2	Bio. & Chem.***	NURS-099	SAT 1	Degree	R.N.
Occup. Ther. Asst.	Algebra 2	Bio. & Chem.***		SAT 1‡	Degree	Nat'l. certificate
Office Information Tech.						
Option: Offi. Admin.-Exec.	Algebra 1				Degree	
Option: Tech. Ofice Supp.	Algebra 2				Degree	
Option: Medical Office Info.	Algebra 1				Degree	
Option: Comp. Soft. App.	Algebra 2				Degree	
Microsoft Office	Algebra 2				Cert. of Completion	
Clerical Office Asst.	Pre-Algebra				Certificate	
Physical Ther. Asst.	Algebra 2	Bio. & Chem.***	MAST-101****	SAT 1‡	Degree	State license
Radiography	Algebra 2	Bio. & Chem.***	MAST-101****	SAT 1*	Degree	Nat'l. certificate
Respiratory Care	Algebra 2	Bio. & Chem.***		SAT 1*	Degree	
Sonography	College Math	Coll. Bio*** H.S. Chem.*** Coll. Physics ***	Coll. English MAST-101****	SAT 1*	Degree	Nat'l. credential
Surgical Technology	Algebra 2	Bio. & Chem.***		SAT 1*	Degree	Nat'l. certificate
Telecommunications Tech.					Degree	

* Not mandatory but recommended
** This requirement may be fulfilled by successful completion of a typing test prior to enrollment
*** This requirement must include labs
**** Prerequisite, but not required before acceptance
† Biology required instead of physics in some options
‡ May be waived with 15 or more college credits
• Please see department description for further information

Note: The physical science requirement may be filled by a course such as physics, chemistry, earth science, astronomy, oceanography, or similar.

Financial Information

Information on Springfield Technical Community College's most recent audited financial statement is available upon request from the Administrative Services office at 755-4422.

TUITION

The Commonwealth of Massachusetts has set tuition at $25 per credit for Massachusetts residents and $242 per credit for non-residents. Under an agreement among the New England states, students from any of the six states may attend college in another of the six states for $37.50 per credit, provided that the program desired is not available in their state or that the community college is closer than that in the home state.

Tuition and fees listed above are subject to change without further notice.

PAYMENT OF BILLS

All tuition and fees are payable before each semester begins. If payment is to be made by agencies or scholarship programs, arrangements must be made in advance with the Bursar's Office. All student financial obligations must be satisfied before a student is considered properly registered.

UNPAID FINANCIAL BALANCES

A hold will be placed on the account of any student with an outstanding balance after final bills are due. No grades, transcripts, recommendations, degrees or other services will be provided to students with outstanding financial obligations. Failure to pay will result in the student's account being turned over to an approved collection company or to the Commonwealth Intercept Program, and the student will be responsible for all collection costs and other fees incurred in the collection of the debt.

GENERAL EDUCATION FEE

The General Education Fee replaces several other fees that were in existence in prior years. The fee is charged on a per credit basis, and the revenue is used to support the College's health services, library, graduation services, and academic programs as well as general College operations and services.

HEALTH INSURANCE

The Commonwealth of Massachusetts, effective September 1, 1989, requires each student carrying nine credits or more to participate in the student health insurance program. If a student has comparable coverage and wishes to waive participation in the Massachusetts Community College insurance plan, the student must complete a written waiver form showing comparable coverage.

SENIOR CITIZEN TUITION EXEMPTION

There shall be no charge for tuition to any Massachusetts resident 60 years of age or over for attending Springfield Technical Community College provided that the College is not over-enrolled. However, certain fees may still be charged. Students wishing to take advantage of this tuition waiver will be required to provide documentation (such as a driver's license) showing proof of age and residence in Massachusetts.

DETERMINATION OF RESIDENT STATUS

An in-state student is defined as an American citizen or a permanent resident alien who has resided in Massachusetts for purposes other than attending an educational institution for at least six months immediately preceding the student's entry or re-entry as a student.

A number of factors will be considered to determine the intention of an individual to maintain permanent residence in Massachusetts. No single factor will be considered decisive. Each case will be decided on the basis of all facts submitted by the student. The burden of proof rests with the student seeking in-state classification. The following indicators shall be considered in determination of resident status.

1.) copies of federal and state income tax forms
2.) documentation of Massachusetts voter registration
3.) copies of valid Massachusetts driver's license and automobile registration
4.) permanent employment in a position not normally filled by a student
5.) continuous physical presence in Massachusetts during periods when not an enrolled student
6.) former residency in Massachusetts and maintenance of significant connections there while absent
7.) all other materials of whatever kind or source which may have a bearing on residency

Tuition for out-of-state residents and international students is $242 per credit. Any person attending the College with a student visa must pay out-of-state tuition.

NEW ENGLAND REGIONAL STUDENT PROGRAM

The New England Regional Student Program enables New England residents to enroll in out-of-state public colleges and universities in the six-state region (Connecticut, Maine, Massachusetts, New Hampshire, Rhode Island and Vermont) at reduced tuition rates, for certain degree programs that are not offered by their home-state public institutions. The purpose of the program is to expand opportunities in higher education for New England residents by facilitating access to programs not commonly offered at every institution. This practice tends to reduce duplication of courses, and to utilize most efficiently the higher educational facilities in each state. For detailed information, contact the STCC Admissions Office, any high school guidance counselor, or the New England Board of Higher Education, 45 Temple Place, Boston, MA 02111, (617) 357-9620.

TUITION ADVANTAGE SAVINGS

You may be able to save one third off the last two years of a bachelor's degree education at a Massachusetts state college or university. Please see the section on Joint Admission and Tuition Advantage Program for more information.

HOPE "SCHOLARSHIP"

Students enrolled in a degree or certificate program at least half time (6 credits) may be eligible for the tax credit known as the Hope Scholarship.

LIFETIME LEARNING

Students enrolled for at least three credits in one semester may be eligible for a tax credit known as Lifetime Learning.

ACCESS GRANT

The Community College Access Grant program, announced in 1998 by the Massachusetts Board of Higher Education, combines state and federal funding to increase access to a community college education. Most students with family incomes below $36,000 who meet certain financial aid eligibility criteria will pay nothing to attend one of the Massachusetts community colleges; most students with family incomes below $80,000 will pay no more than $500 per year for tuition and fees. This program includes increased state funding for financial aid, reducing the cost of attending a community college, promoting the availability of federal grants, and using new federal tax credits. The amount of state funding for this program will change each year.

To qualify for the Access Grant, students enrolled in an associate degree or qualified certificate program must first complete the Free Application for Federal Student Aid (FAFSA). The information obtained from this form determines the Estimated Family Contribution (EFC) for each student. Once this key step is completed, the college financial aid officers work with students to secure the best financial aid package available. Students with an EFC of $2,250 or below (roughly equivalent to an average family income of $36,000) will be eligible for financial assistance sufficient to meet the full cost of tuition and fees. Students with family incomes up to $80,000 will pay a net cost of no more than $500, after receiving the Hope tax credit.

TUITION REFUNDS

Tuition refunds are made only to those students who officially withdraw from the College. In order to do this, a student must complete a withdrawal form, which is available from the Registrar's Office. The College will, thereupon, refund a portion of the student's tuition and fees according to the following schedule:

Withdrawal during the first week of classes
100 percent (tuition and fees)

Withdrawal during the second week of classes
75 percent (tuition & Gen Ed fee only)

Withdrawal during the third week of classes 50 percent

Withdrawal after the third week of classes — No Refund
All refunds take approximately six (6) weeks.

For students receiving federal financial aid, the college is required to calculate a refund in accordance with federal policies if the student withdraws or unofficially stops attending classes.

If the student is attending STCC for the first time, the refund period for withdrawals is through the first 60% of the semester (9th week). If the student is a continuing student, the refund period is through the first 50% (8th week) of the semester.

This refund calculation determines what percentage of federal funds needs to be returned to the financial aid programs, how much money the institution is allowed to retain for tuition and fees, and how much the student may retain for indirect educational expenses. A detailed explanation of this refund policy and examples are available in the Financial Aid Office, Garvey Hall, Room 285.

BOOKS AND SUPPLIES

Estimated costs for books and supplies vary by department, but $400 per semester should pay for most books and supplies. The college bookstore provides, at reasonable costs, many of the items that students require while at STCC.

ADDITIONAL COSTS

For some academic programs, there are additional costs associated with preparation for the profession. There may also be the expense of traveling to clinical or cooperative education sites.

Automotive Technology: a basic set of required hand tools costs approximately $2000. STCC ASSET students receive a 50% discount on tool purchases during their two years at STCC.

Cosmetology: cosmetology kit $650 for fall, $125 for spring; books $525; uniform-2 polo shirts $30, vest $20, sweatshirt $30, black docker pants, cushion sole shoes

Dental Assistant: dental assisting kit $600-700; textbooks for 3 semsters $1300-1500; uniform $150-200; shoes $100-150; name badge $15 lab coat $50-100certification exam $175-300

Dental Hygiene: student kits cost approximately $2100 for freshmen and $510 for seniors. The dental hygiene national board exam and the NERB exams total approximately $900.

Massage Therapy: massage table $400-500

Nuclear Medicine: uniform including lab coat, surgical scrubs and name pin, are $100; radiation badges are $78 total for 3 semesters

Nursing: Nursing fee $62.50 per semester; textbooks total $800 and most must be purchased at the beginning of the first semester; Nursing lab kits in semesters 1-3, $50 per semester; uniform $50, lab coat $30 and shoes $45; CPR certification required yearly $40; NCLEX-RN review course $225; NCLEX-RN license application fee $375 in Mass.; nursing pin $50-125; dress uniform $45; RN Mobility exam (if continuing toward B.S.N.) $500

Occupational Therapy Assistant: lab coat and name pin $35

Physical Therapist Assistant: books $700, uniform $60

Radiography: 5 pairs of scrub pants and tops $200, 5 STCC emblems $15, lab coat $30, pocket positioning reminder $40, radiation badge $20, name tag $20, society dues $20, registry exam review $300, national registry exam $150

Respiratory Care: uinform and stethoscope $100, Board assessment exam before graduation $75

Sonography: uniform, lab coat, white shoes, STCC patches at $2 each and name tag $5

Surgical Technology: scrub suits

SUMMARY OF TUITION AND FEES

The financial requirements of STCC, changing costs, state and legislative action, and other circumstances may require adjustments in the tuition and fees stated or estimated below. The College reserves the right to make such adjustments in these charges as may from time to time be required by the Massachusetts Board of Higher Education or the STCC Board of Trustees. Students acknowledge this reservation by submitting applications or by registering for classes.

Application Fee for Mass. Residents (non-refundable)	$ 10
Application Fee for Out-Of-State Students (non-refundable)	35
Tuition for Mass. Residents (per credit)	25
Tuition for Out-Of-State Students (per credit)	242
General Education Fee (per credit)	80
Student Health Insurance mandatory (approx.)	753
Student Liability Insurance (approx.) mandatory—Health Students	15
Transcripts (each)	3
Mass. PIRG (optional)	7
Payment Plan Enrollment Fee (non-refundable)	30
Information Technology Fee (per semester)	75
Student Service Fee (per semester)	27

Financial Aid

Financial aid is available if you need assistance with paying for your college education. You will need to complete the Free Application for Federal Student Financial Aid (FAFSA). Applications are available in the Financial Aid Office, or you can complete the application electronically at www.fafsa.ed.gov. You must include the STCC Federal School Code #005549. When the STCC Financial Aid office receives an electronic copy of the processed Student Aid Report (SAR), you will be contacted.

Eligibility requirements for receiving financial aid

- demonstrate financial need
- have a high school diploma or a GED
- be enrolled and accepted into a degree-granting or eligible certificate program
- be a U.S. citizen or eligible noncitizen
- be in good academic standing and making satisfactory rpogress toward your degree
- certify that you are not in default on a federal student loan or owe money on a federal grant
- register with Selective Service, if required

Application processs

The process starts with you completing the Free Application for Federal Student Financial Aid (FAFSA). This application collects information about your income, assets, and household size. This information is evaluated by a standard formula that determines what your family could reasonably contribute toward your education. This is called the Effective Family Contribution (EFC). This information is summarized on the Student Aid Report (SAR) and is sent to you for your records. A copy of this report is sent to the institutions that you listed on the FAFSA.

The Financial Aid Office at STCC will consider your direct educational costs of tuition, fees, books, and supplies, as well as indirect costs such as transportation and other living expenses. These costs, less the Effective Family Contribution, will determine your financial need. Our goal is to try to award each eligible student enough money to cover the direct educational expenses and a portion of the indirect costs. Financial aid is based on your ability to pay for your education as well as the availability of funds at the college.

If you are eligible, you will receive a Financial Aid Award Letter indicating the type and amount of aid offered. These awards are based on full-time enrollment (12 or more credits.) Your enrollment status will be determined after class lists are processed, and the awards will be adjusted accordingly.

Deadlines

While students may file for financial aid throughout the year, STCC has a priority deadline of April 1st. The Mass. Grant deadline is May 1st.

Types of financial aid

The Financial Aid Office receives money from both federal and state agencies. Types of aid include grants, loans, and employment.

Federal Aid

Pell Grant — This award is based on the EFC, the cost of attendance, and your enrollment status of full-time (12+ credits) or 9-11 credits, 6-8 credits, or fewer than 6 credits. The tentative award range is $400 to $4050. Depending on your EFC, if your full-time award is $400, you may not be eligible for a Pell Grant if you are enrolled for fewer than 12 credits. This is an entitlement program as long as you continue to meet federal eligibility requirements.

Supplemental Educational Opportunity Grant (SEOG) — This grant is awarded to students with the greatest need. The minimum award offered is $100. The availablity of funds is limited to the federal allocation awarded to the college.

College Work Study (CWS) — This program allows you to earn money while attending college, and provides you with valuable work experience. All jobs are available on the college campus. If you accept a community service position, you will be required to evaluate your experience. You can work between 10 and 20 hours per week, and earn at least the current minimum wage. Depending on the type of work you do and your skill level, you may earn more money. *New work-study students must report to the Financial Aid Office for an assignment.* New assignments are available beginning the second week of the semester. If you were awarded work-study last year and you are returning in the same position, you must complete a new contract (available in the Financial Aid Office) before you can continue working. Funding for this program is limited.

Federal Direct Student Loan — The interest rate is 4.70% effective July 1, 2005. If you have a financial need, you can borrow a subsidized loan, and the government will pay the interest while you are in school. The loan has to be repaid beginning 6 months after you complete or terminate your studies, or drop below 6 credits. If you do not demonstrate a financial need, you can receive an unsubsidized loan. Interest repayment begins as soon as the loan is disbursed. There are maximum loan amounts depending on whether you are an independent or dependent student, and if you are a first or a second year student. In order to ensure that you do not have a large debt upon graduation, the Financial Aid Office limits the amount of loans offered up front to students. If you find your financial aid award package does not cover your educational costs, please contact the office to review your expenses. If you are awarded a student loan, you must sign a promissory note before aid can be disbursed. If you are a first-time borrower at STCC, you must also attend an entrance interview.

Parent Loans (PLUS) – If you are a dependent student, demonstrate financial need, and are enrolled at least half time, your parents may be able to borrow money for your educational expenses. Your parents are required to pass a credit check, and are expected to begin repayment of principal and interest as soon as the loan is disbursed. The interest rate is 6.10% effective July 1, 2005.

State Aid

On order to be eligible for state aid, you must be a permanent resident of Massachusetts. You are considered a resident if you lived in Mass. at least one year prior to the first day of the fall semester and will continue to live in the state during the academic year. Parents of dependent students must meet the same Mass. residency requirements. In order to receive state aid, you must meet all the federal requirements.

Massachusetts State Grant (MASSGrant) — You must be a full-time student in order to be eligible for this grant, and continue to be enrolled for a minimum of 12 credits at the time of disbursement. Award range is $300-$800, and your EFC cannot be greater than $3800. The state will send you a tentative letter of award, but the STCC Financial Aid Office will certify your eligibility. This award does not usually appear on the STCC Financial Aid Award letter.

Part-Time Grant — You must be enrolled for at least 6 credits but not more than 11 credits in order to be eligible for this grant Your EFC cannot be greater than $3800, and the award range is $200-$425.

Massachusetts Access Grant (formerly Cash Grant) — This award cannot exceed the combined costs for tuition and fees.

Tuition Waiver—This need-based waiver is for students enrolled in the day division. This waiver cannot exceed your tuition costs. You cannot receive more than one waiver of tuition per semester. If you are awarded a tuition waiver from another source, the waiver offered by the Financial Aid Office will be cancelled.

The Financial Aid Office reserves the right to adjust your award due to changes in your eligibility or the availability of funds. We reserve the right to cancel aid awarded if you should subsequently become ineligible because of financial misrepresentation or other reasons specified by federal regulations.

Obligations and Responsibilities

The Financial Aid Office will notify the Business Office of your financial aid award. if your financial aid award is enough to cover your tuition and fees, your bill will be cleared and your schedule mailed. If your award is not enough to cover your tuition and fees, you must pay the balance from your own resources.

You are enrolled once you receive your official schedule from the college. If you cannot attend STCC, you must notify the college in order to avoid charges for tuition and fees. If you are an entering freshman or intra-college transfer, please contact the Admissions Office and notify them of your decision not to attend. Returning students must notify the Registrar's Office. If you never attend your classes, you are not eligible for financial assistance.

Your financial aid is based on anticipated costs for the payment period. If you withdraw from the college or unofficially stop attending all of your classes, you may not be eligible for the aid awarded. The college is required to calculate the amount of aid you are actually entitled to receive up to the point you stopped attending, and return the unearned funds to the appropriate federal and/or state agencies. If financial aid was disbursed on your behalf and you are no longer

eligible for the aid disbursed, you will have to repay the appropriate programs. You may also be responsible for a portion of your tuition, fees, and other charges incurred. If you fail to repay the unearned funds, you will become ineligible for further federal and state financialaid. Even though the college does not require instructors to take attendance, the institution does monitor attendance to see if you unofficially stopped attending classes. College Withdrawal forms are available in the Registrar's Office.

The Financial Aid Office cannot pay for a course you never attended. If we receive information that you never attended a course, your financial aid will be adjusted accordingly. If you already received funds based on enrollment in a class that you did not attend, your aid will be adjusted accordingly and you will be responsible for the overpayment. If you feel you cannot attend some of your courses, please complete a Course Withdrawal form available in the Registrar's Office.

In order to receive financial aid, you must be in good academic standing and making satisfactory progress while pursuing your degree. You must maintain the minimum quality point average and you must successufly complete the minimum number of attempted courses. Failure to meet the minimum requirements will result in a loss of your financial aid.

Satisfactory Academic Progress

To be eligible for federal or state financial aid, you must demonstrate satisfactory academic progress. STCC evaluates your progress at the end of each award period to ensure you are meeting the minimum requirements. This policy applies to all financial aid recipients enrolled in a degree-granting or eligible certificate program. The college is required to evaluate your progress with a qualitative measure such as a cumulative grade point average, and a quantitative measure such as a maximum time frame to complete your studies. This policy includes all periods of enrollment, whether or not you received financial aid.

Minimum standards of evaluation

- Be in good academic standing (not be suspended from the college)
- Maintain the following minimum QPA
- Do not exceed 150% of the total number of credits required for your program
- Successfully complete 67% of courses attempted during the award period

Academic Standing

In order to graduate from STCC, you are required to meet certain minimum standards in your program of study. This policy on academic standing is administered through the Student Succes Center, and applies to all students enrolled in a degree or certificate program. This policy does **not** evaluate remedial courses, credits earned for a prior degree, and Fresh Start classes. *You are not eligible for financial aid if you are on academic suspension.*

Evaluating cumulative grade point average

You must maintain the minimum cumulative quality point average in order to receive financial aid. Unlike Academic Standing, the Financial Aid Office evaluates all attempted courses when calculating your minimum QPA. Credits earned while

attempting a prior degree, courses forgiven under Fresh Start Status, remedial and repeated courses (see below) are included in the cumulative QPA.

Only grades of A, B, C, D, and F have a point value.

Number of credits attempted	Minimum cumulative QPA
12	1.0-1.4999 (one semester of probation)
13+	1.5
27+	1.7
42+	1.9
60+	2.0

Evaluating length of time to complete program requirements

You must demonstrate that you are progressing toward graduation by completing your current degree or certificate program within a reasonable period of time. This is measured in two ways: by the percentage of passing grades at the end of each semester, and the length of time it takes you to complete your program requirements.

You must successfully complete at least 67% of the credits attempted during each award period. If you enroll for less than 6 credits, you are expected to successfully complete all of the courses attempted. You will receive a warning notice the first semester you fail to meet the minimum standards. If you do not complete at least 67% at the end of the next semester, you are no longer eligible for aid.

- Successful grades are A, B, C, D
- Unsuccessful grades are I, F, FA, W

The maximum time frame cannot exceed 150% of the published length of your degree or certificate program. The length of your program is measured in credit hours. For example, if you need 60 credits to graduate in your current program, of study, you can attempt up to 90 credits. Remedial, transfer, incomplete, withdrawn, repeated credits, credits earned while attempting a prior degree, and courses forgiven under Fresh Start Status are all included in the number of attempted credits.

Treatment of Fresh Start Status

You may apply for Fresh Start Status as part of the admission process if you've been away from STCC for at least two years. All prior credits attempted at STCC that meet the degree and grade requirements of the current program will be changed to a grade of P and you start with a new quality point average. This policy applies to Academic Standing only.

Fresh Start Status does not apply to the Satisfactory Academic Progress policy administered through the Financial Aid Office. For purposes of financial aid, all courses attempted at STCC, whether or not you received financial aid, must be evaluated for Satisfactory Academic Progress.

Treatment of remedial coursework

You may attempt up to 30 credits of remedial coursework. You are not eligible to receive financial aid for attempted remedial credits beyond the 30-credit limit.

Treatment of English as a Second Language

Additional consideration will be given to students who attempt remedial ESL courses. You may attempt up to 45 additional remedial ESL credits.

Repeated courses

The Financial Aid Office will follow college guidelines for repeated courses.

Multiple programs

If you are an intra-college transfer, or have graduated and are returning in a new degree or certificate program, credits previously attempted will be counted toward the maximum of 150%.

Calculating Satisfactory Academic Progress (SAP)

At the end of each semester, the Financial Aid Office will run SAP. If your status is "unsatisfactory" your financial aid will be cancelled, and a letter of notification mailed. Processing of an incomplete financial aid file will stop if we determine your status is unsatisfactory.

Warning and probation

You will receive a Warning notice if you do not complete 67% of your courses at the end of the semster. You will receive a Probation letter if your QPA for the first 12 credits attempted is at least 1.0 but less than 1.5. You may continue to receive financial aid during this time; however, if you are not making academic progress after the following semester, you are no longer eligible for aid.

Appeal process

You may file an appeal if you lose financial aid eligibility. You must explain in detail why you failed to meet the minimum standards and explain how your issues have been resolved. Examples of extenuating circumstances may include:

- medical reasons
- personal or family problems
- change of major
- military service
- academic issues

Please attach all supporting documentation, including letters from third parties such as a counselor or health care provider, to the appeal form, and submit the form to the Financial Aid Office within one week from the date of the notification letter. No action will be taken on an incomplete appeal form.

If you attempted too many credits, you must meet with your faculty advisor or a counselor, or contact the Student Success Center to evaluate your academic progress and determine what courses are necessary to complete your degree requirements. Please have this college official complete and sign the plan of study form. The plan of study must include the number of credits needed to graduate and the anticipated graduation date. Attach the plan of study form to the appeal form and submit to the Financial Aid Office.

If you are on academic suspension, you must contact the Student Success Center.

Notification

You will receive notification regarding the status of your appeal. If the appeal is approved, your financial aid will be reinstated, or processing of your file will continue. The Financial Aid Office has the right to limit the number of credits for which you may enroll. If your appeal is approved based on a plan of study, you will receive financial aid only for those courses listed on the plan of study, and not to exceed the expected date of graduation. You must notify the Financial Aid Office if you subsequently change your major.

If there are restrictions placed on your appeal, you must sign and return the Appeal Contract. Failure to agree to the terms of the contract may result in aid being cancelled. If your appeal is approved and you don't maintain satisfactory progress for the subsequent semester, you will lose financial aid eligibiltiy. Action may not be taken on a second appeal if you fail to meet the satisfactory progress standards. If your appeal is denied,you are responsible for your own educational expenses.

Veterans' Information

Prior to applying to the day or evening school, all students should contact the Veterans Affairs office for the correct procedures to follow in order to establish V.A. benefits. All new students eligible to receive V.A. benefits must contact the office of Veterans Affairs upon receiving their acceptance letters. All returning students receiving V.A. benefits must contact the Veterans Affairs office after pre-registering for the upcoming semester. Registering with the College does NOT certify an eligible student for V.A. benefits for the upcoming semester. All eligible students must contact the V.A. office in person to initiate enrollment certification. Students must also be matriculated in a degree-granting program to receive their benefits.

The Office of Veterans Affairs is located within the Bursar's office in Building 15. The phone number is 755-4393.

NOTE: All students receiving V.A. benefits must contact the office of Veterans Affairs after withdrawing from a course or terminating enrollment, and when changing an address, changing dependent status, or changing an academic program.

All students should contact the Financial Aid office to investigate eligibility for federal and state grants and scholarships.

ACADEMIC STANDING

The quality point index is required to maintain acceptable academic standing in an approved program of study.

For Continuing Education purposes, the completion of 12 semester hours will be considered the completion of a semester.

Students receiving benefits from the Veterans Administration are advised that if their quality point average does not permit them to remain in a program, they may continue to attend Continuing Education courses at their own expense until their average allows them to re-enter the program.

Students are cautioned that the V.A. will not provide benefits to repeat a course which has been previously passed, nor will they support courses which do not meet the requirements for an approved program of study.

Students receiving benefits from the Veterans Administration are advised that benefits will be extended only for the normal length of time that an approved program is designed to encompass. Full-time students must complete associate degree programs in five semesters. Part-time students will receive reduced benefits for the extended period of time necessary to complete their program of study. Specific questions about benefits, program approval and eligibility will be answered by the Veterans' Office on campus.

GRADING PROCEDURE AND UNSATISFACTORY GRADES

STCC makes use of a scale from "A" to "F" converted into quality points which are utilized in determining a cumulative average. A grade of "F" equals 0 quality points and is unsatisfactory. A "D" equals 1.0 and may count toward a degree if the quality point cumulative average is maintained with respect to degree specifications. (Refer to page on Minimum Prerequisites for Admission.) The Veterans Administration does not authorize benefits for courses which are audited or challenged. **A withdrawal or termination from a course could constitute an overpayment for the veteran.**

WITHDRAWAL AND ABSENCES

All students are required to notify the Registrar of withdrawals or terminations. Students receiving Veterans benefits must also contact the office of Veterans' Affairs. Attendance procedures are at the discretion of the faculty.

Students receiving Veterans benefits will be considered to be making satisfactory progress in each course each semester at the following intervals:

1. If their names appear on the official class list certified by the instructor at the end of the official add/drop period.
2. If they receive a mid-semester grade.
3. If they receive a final grade.

In the event any of 1. through 3. does not occur, the V.A. will be notified within 30 days after the enrollment report or grade report has been issued that said student is not enrolled in the course.

Faculty members may request the Student Services office to withdraw a student for excessive absences.

TUITION WAIVERS AND/OR EXEMPTIONS

For information regarding veterans tuition waivers or Massachusetts National Guard tuition exemptions, contact the office of Veterans Affairs. Students expecting to receive one of these waivers/exemptions must come to the V.A. office prior to the start of each semester.

All veterans are encouraged to contact the office of Veterans Affairs prior to registration so that the staff can assist you with information and the necessary paperwork to establish your benefits.

Academic Information

CAREER PROGRAMS
Associate Degree

STCC offers a variety of career programs that are designed primarily for the individual seeking two years of higher education and immediate job opportunities upon graduation. Such career programs are available in Engineering Technologies; Business & Information Technologies; Health; and Arts, Humanities and Social Sciences. Each of the career programs offers a two-fold objective. The student receives a general education background to provide him/her with a better understanding of the community around him and a technical preparation designed around a specific occupation.

Career students who plan to continue their education beyond the two-year level are advised to consult with their College counselor early in the program.

Certificate Programs

In addition to the two-year, associate degree career programs, there are also three 30+ credit certificate programs, as well as a number of shorter certificate of completion programs.

Certificate of Completion Programs

Several academic departments offer certificate of completion programs providing training for entry-level positions. These programs are designed to assist individuals who wish to develop marketable skills and need more rapid entry into the job market. Certificate of completion programs offered at STCC include:

- Business and Information Technologies
  - Computer Software Applications
  - Medical Coding and Billing Specialist
  - Microcomputer Specialist
  - Microsoft Office
  - Programmer
  - Web Programming
- Engineering Technologies
  - Architectural Technology
  - CAD/CAM
  - Computer-Aided Drafting
  - Computer-Aided Manufacturing
  - Construction Management
  - Desktop Publishing
  - Electrical/Robotics Technology
  - Electronic Systems Technology
  - Fire Science
  - Graphic Arts Technology
  - Heating/Ventilation/Air Conditioning
  - Landscape Design and Management
- Health
  - Clinical Laboratory Assistant
  - Medical Assistant

Liberal Arts/General Studies
    Health Aide
Math, Sciences and Engineering Transfer
    Biotechnology Manufacturing
    Technical Engineering

DISTANCE EDUCATION

Distance learning courses are subject to the same policies and processes as all other courses.

Distance education courses, offered completely online, are a very popular option at STCC. Developed and taught by STCC faculty, the courses offer a learning "any time, any place" convenience. Online courses contain the same content as the on-site courses; the information is simply presented differently. These courses may fulfill requirements for electives in several STCC associate degree programs. A complete associate degree program in liberal arts/general studies is now available; a general business certificate will be offered. Courses are being developed for distance learning on a continuous basis. Check with the Dean of Continuing Education and Distance Learning or the Admissions Office for current offerings.

TRANSFER PROGRAMS

The transfer programs are designed for students who plan to transfer to a senior college or university after completion of one or two years at STCC. The courses offered in these curricula are generally those required to provide a broad educational background before beginning specialization in a major field of study. A high quality of academic achievement, revealing seriousness of purpose and of sound habits of study, is the most important qualification for successful transfer.

Four primary transfer programs are offered at Springfield Technical Community College:

1. Business Administration
2. Engineering and Science Transfer
3. Liberal Arts Transfer
4. General Studies

Many students attending the College consider, at some point in their career, transferring to a four-year institution. It is possible to transfer in a variety of areas, although careful planning is required. Students should be in early and constant contact with the transfer counselor and their academic advisor so that their preparation for transferring is correct.

Transfer Counseling

Students interested in transferring to four-year colleges should plan early in order to take courses or programs paralleling requirements at the college they plan to attend. Assistance, in the form of individual advisement, is available by contacting the Office of Cooperative Education/Career Services and Transfer Affairs. In addition, catalogs, applications, and other transfer resources are available. Prospective transfer students should also review the Commonwealth Transfer Compact Information below:

Commonwealth Transfer Compact

The Commonwealth Transfer Compact is an articulation agreement between the four-year state colleges and universities and the community colleges in Massachusetts. In 1990 the Compact was revised to provide a better process to facilitate the transfer of college credits and to ensure appropriate recognition for academic progress earned by students in a community college who wish to transfer and continue their education at a Massachusetts public college or university.

The Compact provides that an associate of art or an associate of science degree will be transferred as a unit (providing the student meets all admission requirements and is accepted) and will be applied toward a bachelor's degree, if the following courses are included in the associate degree:

Compact Core Courses
6 semester hours of English composition/writing
9 semester hours of behavioral and social sciences
9 semester hours of humanities and fine arts
8 semester hours of natural or physical science (with a laboratory component)
3 semester hours of mathematics

The remaining credits making up the total of 60 are to be on a college level.

Other points of clarification regarding the Compact include:

1. The student must complete the associate degree with a minimum of 60 semester hours exclusive of developmental coursework.
2. All Transfer Compact requirements must be fulfilled while meeting the requirements for the associate degree.
3. A Compact student may be required to take no more than 68 additional credits at the four-year college unless the student changes his/her program upon entrance, or additional general education requirements and/or requirements of the major total more than 68 credits.
4. The grade of "D" or "D-" will be accepted toward the bachelor's degree, but a receiving institution is required to apply "D" or "D-" credit toward a major only if it does so for "native" students, that is students who enrolled in the four-year institution as freshmen.
5. A student must have achieved a cumulative grade point average of not less than 2.0 at the community college awarding the degree to receive Transfer Compact status.
6. If a student has not completed the associate's degree, credit earned does not come under the protection of the articulation agreement.
7. Transfer Compact status **does not** assure admission to any state college or university. It only assures acceptance of college-level credit.

JOINT ADMISSION/TUITION ADVANTAGE

(Massachusetts public colleges and universities)

Springfield Technical Community College participates in the Joint Admission Program with the Massachusetts public colleges and universities. This program guarantees participating students admission to the Massachusetts public institution of their choice, provided they graduate from an approved major at STCC with a

minimum cumulative grade point average of 2.5 or higher. A list of approved majors can be obtained at the STCC Admissions Office. Participating students are subject to the program requirements in effect at the senior institution when they matriculate at STCC.

The Tuition Advantage Program, approved by the Board of Higher Education, is available to all Joint Admission students who graduate with a GPA of 3.0 or higher and transfer to a Massachusetts state college or University of Massachusetts campus with which they were participating in Joint Admission. This program began in the fall of 1997. Students are entitled to a reduction in tuition of 1/3 of the in-state rate, whether or not they are in-state residents.

JOINT ADMISSION AGREEMENTS *(Area private colleges)*

For complete information on these agreements, please contact the Admissions Office or the Transfer Ofiice.

American International College

American International College, located on State Street in Springfield, is a private, independent coeducational institution founded in 1885. AIC offers undergraduate and graduate programs, including doctorate degrees in education and physical therapy. Academic majors are grouped in five schools: Arts and Sciences, Business Administration, Health Sciences, Psychology and Education, and Continuing Education and Graduate Study.

Through a Joint Admission agreement signed in September 2005, and taking effect in fall 2006, students accepted into certain academic programs at STCC will be conditionally accepted into AIC. The goal of the agreement is to ease transfer of STCC associate degree graduates into bachelor's degree programs at AIC. STCC students may declare their intention to participate in this joint admission program at any time prior to completing 30 semester hours of study at STCC.

Conditions of acceptance into AIC include earning a minimum 2.0 cumulative grade point average and either the associate degree or a minimum of 30 semester hours in a program accepted by AIC. Students seeking joint admission into AIC programs such as nursing, occupational therapy, or physical therapy must satisfy all program and grade requirements for those programs.

While enrolled in this joint admission program, STCC students will have access to the AIC library and student support facilities and programs, and are encouraged to attend AIC athletic and student activities-sponsored events.

STCC students transferring to AIC will be considered for need-based and merit-based financial aid. Also, depending on their grade point average at STCC, students may be offered additional financial awards. Students with a minumum of 12 transferable credits will be offered, at the time of their matriculation at AIC, awards ranging from $2,500 to $6,000 depending on their cumulative grade point average. In addition, students signing the joint admission agreement will be eligible for an award of $3,000 or $4,000 per year depending on the point in their academic career at STCC - up to two years or after two years - when they sign the agreement with AIC.

Western New England College

Western New England College, located on Wilbraham Road in Springfield, is a private, independent, coeducational institution founded in in 1919. More than 30

undergraduate programs are offered in the Schools of Arts and Sciences, Business, and Engineering. Graduate programs are offered in the Schools of Arts and Sciences, Business, Engineering, and full- and part-time programs are held at the School of Law.

Through the joint admission agreement signed in December 2005, to take effect in fall 2006, STCC students may declare their intention of participating in this program at any time prior to completing a maximum of 60 semester hours. Students identified as eligible to participate in the program will be conditionally accepted at WNEC. The goal of the program is to facilitate the transfer of eligible participating students from STCC to WNEC upon completion of their associate degree program or a minimum of 60 semester hours at STCC.

Conditions of acceptance into WNEC include earning a minimum 2.3 cumulative grade point average and either the associate degree or a minimum of 60 semester hours in a program accepted by WNEC. Students accepted into a WNEC program such as social work, business, accounting, finance, management, marketing, computer science, or engineering, must satisfy the program and grade requirements for those programs.

While enrolled in this joint admission program, STCC students will have access to the WNEC library and student support facilities and programs, and are encouraged to attend WNEC athletic and student activities-sponsored events.

STCC students transferring to WNEC will be considered for need-based and merit-based financial aid. Also, depending on their grade point average at STCC, students may be offered additional financial awards. Students with a minumum of 24 transferable credits will be offered $5,000 a year toward tuition and fees at WNEC if they have maintained a cumulative grade point average of 3.0 to 3.49, or $7,000 a year if they have earned a grade point average of 3.5 to 4.0, on a scale of 4.0.

Bay Path College

A joint admission agreement is being signed with Bay Path College; as this catalog goes to press, details are not yet available. Please contact the Admissions or Transfer office.

Transfer Articulation Agreements

STCC has established individual transfer agreements with several private and public colleges for specific academic programs. These agreements ensure graduates of corresponding STCC programs entrance on the Junior level. Transfer Articulation Agreements currently are in effect with the following institutions:

American Armenian International College of LaVerne, CA - B.S.,
Optical Engineering
American International College - B.S., Nursing; B.S., Business Administration
Boston Architectural Center - Architectural Certificate Program
Boston University College of Engineering - B.S., Engineering
Elms College - B.S.W., Social Work; B.S., Nursing, B.S.,
Health Science Management; B.A., Paralegal Studies/Legal Studies

Fitchburg State College - B.S., Industrial Arts
Framingham State College - B.S., Nursing
Rensselaer Polytechnic Institute - B.S., Engineering
Rochester Institute of Technology - B.S., Engineering Technology
Russell Sage College - B.A., Mathematics; B.S., Computer Science
SUNY Institute of Tech. at Utica/Rome - B.S., Electrical Engineering Technology; B.S., Civil Engineering Technology
Salem State College - B.S., Fire Science Administration
Springfield College - B.S., Biology; B.S., Computer Science; B.S., Management Information Systems; B.S., Business Administration
University of Hartford - B.S., Respiratory Therapy
University of Massachusetts at Amherst - B.S., Engineering; B.S., Education; B.S., Nursing; B.S., Building Materials and Woods Technology
University of Massachusetts at Dartmouth - B.S., Engineering
Ward College - B.S., Electrical Engineering Technology
Western New England College - B.S., Engineering, B.S., Business Administration
Westfield State College - B.S., Early Childhood Education; B.S., Elementary Education; B.S., Secondary Education; B.S., Management Information Systems
Worcester Polytechnic Institute - B.S., Engineering

For additional information, contact the Office of Academic Affairs.

University of Massachusetts at STCC

The University of Massachusetts has opened an office on the STCC campus to advise and assist STCC students and alumni who are interested in transferring to UMass to complete a bachelor's degree. Through this partnership, STCC students will have easier access to information on admission policies, transfer procedures, and courses and degree programs, as well as academic advising. This office also provides assistance for students who are interested in continuing education courses at the university. The office is regularly staffed on a part-time basis, as well as by appointment, and may be reached at 755-4924 or info@contined.umass.edu.

University Without Walls - Adult Bachelor's Degree Program

The University Without Walls (UWW) is an adult bachelor's degree program of the University of Massachusetts in which students design an individualized degree ina field of their choice and convert learning from life experience into academic credit.

The University Without Walls transfer option of the STCC General Studies associate degree provides adult learners with the opportunity to earn an associate degree, complete UMass general education requirements, and make connections between a liberal arts education and life experience. This option is ideal for adults who have career and life experience and are interested in a four-year degree in any field, but have few or no college credits. UWW maintains an office on the STCC campus in Garvey Hall, Room 267. Telephone 732-5262.

REQUIREMENTS FOR GRADUATION

GRADUATION REQUIREMENTS

The Springfield Technical Community College Board of Trustees has statutory authority under the Commonwealth's Board of Higher Education to confer academic degrees. Candidates for degrees shall have fulfilled the following requirements:

1. Candidates for degrees must meet all departmental graduation requirements. A minimum of 15 credit hours in the major must be earned in residence at STCC. Also, the student must have completed at least 20 credits in general education.
2. Candidates for certificates of completion must meet all the departmental graduation requirements. A minimum of 12 credit hours in the major must be earned in residency at STCC.
3. The student must have earned a minimum cumulative quality point average of 2.0 for all college level courses. Developmental courses are not credited toward graduation requirements.
4. The student must have satisfied all financial obligations to the College.
5. A Perkins Student Loan recipient or a federal Direct Student Loan recipient must have completed the exit interview with the Financial Aid Officer or his/her representative.
6. To earn a second degree at STCC, the student must complete a minimum of 15 separate and distinct credit hours in the major at STCC and meet all specific requirements for the new program. To earn a second certificate of completion at STCC, the student must complete a minimum of 12 separate and distinct credit hours in the major at STCC and meet all specific requirements of the new certificate of completion. Students wishing to complete both a degree and a certificate within the same department may do so as long as they fulfill all above requirements for both the degree and the certificate. When under these circumstances requirements overlap and the same course is required for both the degree and the certificate, students may apply the credit for a course they have taken only once toward both the degree and the certificate.

NON-GRADUATE PARTICIPATION AT COMMENCEMENT

It is to be recognized that permission for a non-graduate to participate in commencement exercises is a privilege and is permitted only under exceptional circumstances.

Students in degree,certificate of completion, and 30-credit certificate programs who are candidates for graduation may petition to participate in commencement exercises if they are found by the department chair and the dean of the school to be in good academic standing and deficient in not more than one course, totaling not more than than four credits. Good academic standing is defined as meeting the following criteria: GPA of 2.0 or better; completion of all course work required for the degree or certificate with the exception of one course up to four credits; all other departmental or program requirements fulfilled.

Permission to participate in commencement may then be granted provided that the successful completion of these deficiencies within one calendar year will fulfill all requirements for the awarding of that degree or certificate. The department

chair and the dean of the school must sign the student's record to this effect at the time of certification, and authorize the Registrar to permit the participation and to notify the student to this effect prior to the commencement exercises.

Upon notification, the student may petition the Registrar's Office and be granted permission to participate at commencement. The names of these students will not appear on the commencement program until the next commencement exercises, provided that all program requirements have been successfully met and a new Intent to Graduate form has been appropriately filed and certified.

In the case of departments with clinical courses that are taken or completed in the summer immediately following commencement, upon initial certification, such potential graduates may participate in the ceremony and be included on the commencement program with a notation indicating the actual date of completion. Honors will also be noted on the program based on the student's QPA to date. Such students will also be eligible for other commencement honors and awards with the exception of the Outstanding Academic Achievement Award (4.0) that will be awarded, if merited, after final certification for graduation.

GENERAL EDUCATION CURRICULUM

Students enrolled in an Associate in Science degree program are required to take a minimum of 20 credits in general education. For those in an Associate in Arts program, the minimum requirement is 33 credits in general education. For the Associate in Applied Science, the general education requirement is 16 credits. The configuration of courses is distributed among the math and natural sciences, the humanities, and the social and behavioral sciences.

The purpose of general education courses is to develop in students the capacity for critical thinking; the ability to communicate effectively; an appreciation for the arts and humanities; and an understanding of the historic basis of our modern, technological society. General education also aims to assist in the development of people who are educated in mind, responsive to civic and social obligations, capable of adjusting to change, and learners for life.

Consult the individual departmental course of study for the specific distribution of general education courses required by each program.

SPECIAL PROGRAMS

DEVELOPMENTAL EDUCATION

The College offers developmental (non-college-level) courses in math, science, English, and reading. Students enrolled in these courses receive support in the form of tutoring, progress evaluation, advising, and counseling as needed, with special attention toward fulfillment of students' academic career goals.

Developmental math courses are offered in two forms: self-paced and lecture. In self-paced classes, students progress through the various levels of mathematics at their own individual rate. Lecture classes are more traditional. Instructors, audio tapes, video tapes, interactive software, and peer tutors are resources available (hours and location may vary by resource) to all students enrolled in developmental math courses. The Testing and Assessment Center located in Building 17, Room 425, is the testing/tutorial area for developmental mathematics. In addition to their

assigned class period, students may use the facilities at any time the Testing and Assessment Center is open during the semester.

The Developmental English Department offers developmental writing and reading courses and a special course of study for students for whom English is not the native language. The department offers tutorial services through its English Tutoring Center in Building 13, Room 101. The department also offers computer-assisted learning in the computer laboratory in 13/105 and a full-service language laboratory for English as a Second Language courses in 13/305.

ENGLISH AS A SECOND LANGUAGE COURSES

The English as a Second Language program has designed intensive academic courses to help students develop language skills to prepare for and successfully qualify to enter their choice of academic program at STCC. ESL classes are offered through the General Studies program.

Students are placed into an appropriate level of English as a Second Language after the results of a diagnostic exam have been evaluated.

There are four different levels of ESL courses. Each level has three distinct classes, which are taken together. Students meet with their instructor for 15 hours of classroom instruction per week.

The ESL program has a well-developed tutorial program. Tutors are available to assist those students who need additional support in understanding English language concepts, and to help them improve their language skills.

HONORS CERTIFICATE PROGRAM

The Honors Certificate Program offers a challenging academic experience for qualified students who wish unique study and research opportunities in their major field of study. Working individually with selected professors, Honors Certificate Program participants receive specialized advising and support services, increased scholarship and transfer opportunities, and a special notation of distinguished academic work on diplomas and transcripts. The STCC Honors Program has been designated a Commonwealth Honors Program, giving our students additional transfer opportunities to Commonwealth College, the state's honors college.

Honors Certificate Program participants are selected on the basis of their academic potential and motivation. Entering freshmen with a 3.5 QPA from high school, or a 3.0 QPA from a high school honors program (or its equivalent), or a 1000 combined SAT score are eligible to apply for admission.

Currently-enrolled students at STCC are eligible after completing 12 college-level credits, if their QPA is 3.5 or higher. Students whose QPA's do not meet these standards, but who feel they have the ability and interest necessary to participate in the Honors Certificate Program may apply for admission by submitting (1) a letter of recommendation from a recent teacher, and (2) either a letter of intent explaining why admission to an Honors Program is sought, or an original piece of writing demonstrating academic competence.

There are three levels of of honors within the Honors program:

Honors Certificate and Scholarship Recipient: a student who has satisfactorily completed all requirements for the Honors certificate: 6 credits taken in two Honors

colloquia; 3 credits of the Library Research Colloquium; and 6 or more credits from add-on components or Honors independent study.

Commonwealth Honors Program Scholar: a student who has achieved a cumulative grade point average of 3.2 out of 4.0, and completed three Honors courses (9 credit hours) with a grade of B or better, as well as one Honors seminar or colloquium which is interdisciplinary, for Honors-level students only, and preferably team-taught. This program provides students with an option to substitute an Honors thesis or project involving independent research for one of the three required Honors courses.

Springfield Technical Community College Scholar: a student who has satisfactorily completed Honors add-on projects in three college-level courses, or two Honors add-ons and one colloquium.

Upon graduating, students who complete any of the above levels will be recognized at Honors Convocation.

For further information and an Honors Certificate Program application, contact the Office of Academic Affairs or the Honors Program Coordinator, at 755-4244.

COOPERATIVE EDUCATION/CAREER SERVICES AND TRANSFER AFFAIRS

This office offers a wide variety of employment-related services to students and alumni. The Cooperative Education program allows students to earn credit for taking advantage of part-time employment in their field while completing degree requirements. Career Services assists students and alumni who are seeking full-time or part-time employment after graduation. Both programs strive to bring students and the business community together for their mutual benefit.

Cooperative Education/Internship

In order to participate in Cooperative Education, a student must have achieved a 2.5 quality point average. Most students participate in Cooperative Education/ Internship during their third semester in an established major; however, it is possible to participate in the program prior to that point. Students interested in participating prior to their third semester must receive a written recommendation from their faculty coordinator; final approval is made by the Director of Cooperative Education and Career Services.

Once a student is accepted into the program, a job developer and the student work together in securing a qualified position. During the first week of job placement, a learning contract is executed by the student, the faculty coordinator, the employment supervisor, and the Director of Cooperative Education and Career Services. This learning contract outlines the learning goals and objectives as well as the criteria to be used in grading.

The faculty coordinator meets regularly with the student, visits the work site, evaluates his/her work performance, and determines a letter grade at the end of the semester. Students may receive a 3- or 6-credit Cooperative Education experience in one semester depending on the number of hours to be worked and the type of responsibilities to be required of the student. A total of 9 credits may be earned in the program during a student's quest for a degree. Programs participating in Cooperative Education/Internship are:

Automotive Technology
Biotechnology
Business Administration
Accounting
Finance
General Business
Management
Marketing
Civil Engineering Technology
Computer Information Technologies
Computer Systems Engineering Technology
Digital Media Production
Electrical Engineering Technology
Electronic Systems Engineering Technology
Energy Systems Technology
Engineering and Science Transfer
General Studies
Graphic Arts Technology
Options: Commercial Art
Digital Photography
Landscape/Design and Management Technology
Laser Electro-Optics Technology
Law Enforcement/Criminal Justice
Liberal Arts
Mechanical Engineering Technology
Medical Coding and Billing Specialist
Office Information Technologies
Option: Computer Software Applications Specialist
Option: Office Administration - Executive
Option: Medical Office Information Technology
Clerical Office Assistant*

*one-year certificate program

The Office of Cooperative Education/Career Services and Transfer Affairs is located on the second floor of Building 27.

ACADEMIC SUPPORT SERVICES

ACADEMIC ADVISING

Academic advising is a shared process between a student and his or her academic advisor. A good advising relationship places an emphasis on goals and objectives while focusing on the educational and personal development of the student.

Demonstrating Springfield Technical Community College's commitment to advising, each day student is assigned an academic advisor, usually a faculty member, who has knowledge of the College's policies, procedures, and program degree requirements. Each student should take full advantage of this resource while being mindful that *it is ultimately the responsibility of the student to understand and complete the specific degree requirements for graduation.*

Every semester, students receive a letter indicating the name and office location of their advisor. Generally, faculty advisors are available to meet with their advisees during their posted office hours. Professional staff advisors meet with their advisees by appointment. Although students must see their advisors at least once a semester to select courses for the upcoming semester, all students are encouraged to seek appointments with their advisors whenever the need arises. Academic advisors are a great source of information and support, and the success of their advisees is their ultimate goal.

Some Advisement Basics

- Every fall semester, advisors hold group meetings with their advisees to share important academic information and to get acquainted.
- Approximately eight weeks into each semester, students are reminded to meet with their advisors to review their academic progress, plan for the upcoming semester, and select courses. At this meeting, students receive their mid-semester grades and next semester's course offerings.
- The advisor's signature is required for most academic transactions (e.g., course selection, course withdrawals, and application for graduation.)

Advising Services for Evening Students

Students who attend weekend or evening classes exclusively may meet with an academic advisor at any time during office hours. To schedule an evening advising appointment, please call the Registrar's Office at 755-4321.

For more information about academic advising, please contact the Registrar in Building 15, room 103 or call (413) 755-4321.

BILINGUAL PROGRAM

The Bilingual program at STCC is designed to assist students whose native language is other than English. Bilingual counselors provide academic/vocational counseling and personal counseling as well as tutoring in English and assistance in filling out financial aid forms. The Bilingual Services Office is located in Garvey Hall (Building 16), room 146.

THE LIBRARY

The library, located in Building 27, offers a wide variety of resources and services to all students. Most materials can be borrowed, and electronic resourecs can be accessed via the Internet. A valid STCC ID card with a library barcode affixed to the back is required to check items out or to use the library's electronic resources from a computer off campus. Barcodes can be obtained at the library circulation desk.

The library's homepage, http://library.stcc.edu, has comprehensive information about the library. You will find helpful hints about using our online catalog, doing research papers, and searching the Internet and our specialized databases. These cover a wide range of academic and general interest subjects; the college pays for access to them. Also on the library's homepage you will find library hours and the library's weblog with news, events, new books, CDs and DVDs, etc.

When you come to the library, please ask for assistance at any time. The circulation staff will help you check out materials, locate faculty reserves, and put materials

on hold. The AV staff will help you find audio or video materials to check out or use in the library. The reference staff will help you find a book, locate an article, search our databases, print articles (for a small fee) or locate materials at other libraries. Reference librarians teach many classes during which students learn how to locate, use and evaluate information. In the library there are numerous computers you can use, and there is a wireless network so you can bring your own laptop.

Libraries are interconnected, and STCC belongs to the C/W MARS network, to which many public and college libraries in western Massachusetts also belong. The college is part of the Cooperating Colleges of Greater Springfield, and with your valid STCC ID you can use the college libraries in the area., In addition, students at STCC may use the UMass library and other public higher education libraries. At any library you use, please remember that you are subject to that library's rules and regulations

STUDENT SUCCESS CENTER

The Student Success Center is located on the first floor of Building 27. The Center is designed to be a comprehensive academic support facility that provides students with a centralized location to receive a combination of walk-in assistance on-site or appropriate referral to other student/academic support services. The Center coordinates all campus tutorial services; provides assistance and advocacy for returning adult students; offers walk-in academic advising when regular advisors are not available; oversees the academic early warning system and student/advisor alert system; and administers the College's academic standing policy. The Student Success Center also offers tutorial software, Internet research access, and open computer lab time, and works with STCC faculty to provide students with various computer-based learning experiences as part of their coursework.

STUDENT SUPPORT SERVICES PROGRAM

The Student Support Services office is comprised of several grant programs designed to assist students in adjusting to the college environment and to maximize their potential for success. Services include academic and career advising; orientation and workshops; personal counseling; tutoring; a one-semester course; and a Summer Start program. Emphasis is placed on individualized support and monitoring student progress through graduation. The office is part of the Enrollment Management Division, and is located on the second floor of Building 27.

TUTORIAL ASSISTANCE PROGRAM

The Tutorial Assistance Program is an important component of Springfield Technical Community College. Through the services of this program, students in need of tutorial assistance receive tutoring in any academic field. The Tutorial Assistance Program is administered through the Student Success Center.

REGISTRATION AND ACADEMIC RECORDS

ACADEMIC YEAR

The academic year at Springfield Technical Community College is divided into two semesters with the first semester ending prior to Christmas vacation and the

second semester resuming in the latter part of January. The final week of each semester is devoted to final exams.

Prior to the last week of classes for the day school, the college will determine if the semester will be extended with the use of snow days that are built into the academic calendar. If a final examination in the day school is cancelled due to weather or other emergency situations, it is automatically rescheduled for the same place and time on the final examination make-up day that is built into the academic calendar.

CLASS SCHEDULE

A class schedule is published each year along with the academic calendar.

In the majority of cases, with the exception of Directed Study courses, three-credit courses meet three times a week on Monday, Wednesday, and Friday, and are of 50 minutes duration, or are 75 minutes long and meet twice a week on Tuesday and Thursday. Specific times on Tuesdays and Thursdays are reserved as college hours, when meetings and co-curricular activities can occur. Exceptions may be found in career curricula and other special programs.

REGISTRATION PROCESS

Returning students may begin registering for the spring semester during the priority registration period in November, and for the summer and fall semesters in April of each year. After meeting with advisors to discuss course selection, returning students may register for courses online using their individual WebAdvisor accounts. It is the student's responsibility to seek out information concerning departmental course requirements prior to registration. This may be done with the assistance of the faculty advisor, or department chairperson. Returning students are expected to pay their bills and complete the registration process prior to the start of classes.

New students will be sent information regarding registration with their acceptance letter.

Students wishing to change their schedules may do so through the first week of classes. Admittance to a course at this time is, however, dependent upon the seats available.

EXAMINATIONS AND GRADES

Final examinations are scheduled for each course. At the end of each semester, all students receive written letter grades according to the following standards:

Letter Grade	Qualitative Equivalent	Quality Points Earned Per Credit Hour
A	93-100	4.0
A-	90-92	3.7
B+	87-89	3.3
B	83-86	3.0
B-	80-82	2.7
C+	77-79	2.3
C	73-76	2.0

C-	70-72	1.7
D+	67-69	1.3
D	63-66	1.0
D-	60-62	0.7
F	Below 60	0.0
I	Incomplete	no grade
W	Withdrawn	no grade
AUD	Audit	non-credit

Non-graduation-credit courses are not factored into the Quality Point Average.

The grade of Incomplete (I) indicates that a major requirement of the course has not been completed. The following policy shall apply to incompletes:

1. The Incomplete grade is a temporary grade reserved for those special circumstances when a student, otherwise in good standing in a course, is unable to satisfy all course requirements by the end of the semester.
2. The Incomplete grade is appropriate when the student is likely to complete the missing work by the end of the fourth week of the subsequent semester.
3. Upon completion of the work, the instructor will change the "I" to a permanent grade; otherwise, the incomplete grade "I" will change to "F" four weeks after the beginning of the next regular academic semester.
4. This policy shall apply uniformly to day and evening classes.

ACADEMIC STANDING

A. *Required Quality Point Average*

The quality point average required to maintain good academic standing is:

1. A minimum of 1.5 cumulative average for students who have attempted 12 or more credits at Springfield Technical Community College, including accepted transfer credits.
2. A minimum of 1.7 cumulative average for students who have attempted 27 or more credits at Springfield Technical Community College, including accepted transfer credits.
3. A minimum of 1.9 cumulative average for students who have attempted 42 or more credits at Springfield Technical Community College, including accepted transfer credits.
4. A minimum of 2.0 cumulative average for students who have attempted 60 or more credits at Springfield Technical Community College, including accepted transfer credits.

NOTE: Incomplete, Withdrawal, and Failure grades are counted as courses attempted, but Incompletes and Withdrawals are not factored into the quality point average. Non-graduation credits, from developmental courses which are designated by course numbers beginning with 0 as in LD 099, are not transferable and are not averaged into the graduation cumulative quality point average. See next page for further information.

B. *Probation and Suspension*

Students who do not meet the above requirements will be placed on academic probation. After one semester of probation, a student will be:

1. Suspended unless the cumulative quality point average is raised to that required for good standing (i.e., 1.7 for 27 hours, 1.9 for 42 hours, 2.0 for 60 hours or more), or
2. Continued on probation if the semester quality point average is 2.25 or above but the cumulative point average stays below that required to remain in good standing, or
3. Continued on probation if not in attendance, or
4. Removed from probation if the cumulative point average is raised to or above that required to maintain good academic standing.

NOTE: A student may be suspended without having previously been placed on probation if the cumulative average falls below 1.0.

C. *Waiver of Provisions of the Academic Standing Policy*

The Student Success Center administers the Academic Standing policy and questions may be addressed to the Center.

An Academic Review Committee is named by the President of the College. The Committee has the authority to:

1. Re-admit students.
2. Waive provisions of the policy on academic standing.
3. Hear student petitions or grievances pertaining to the policy.
4. Give counsel and advice to those who administer the policy and give interpretation and intent clarifications.

Students in the health programs must maintain a minimum quality point average of 2.0 in their major area of concentration and be accepted by a clinical facility for affiliation. Nursing students must maintain a 2.15 in their major area of concentration. All students in health sciences and nursing must maintain a quality point average of 2.0 in the biological and physical sciences.

The accumulation of credits alone does not necessarily mean that a student is entitled to a degree. A student should refer to his/her specific program curriculum for graduation requirements.

DEVELOPMENTAL COURSES (NON-COLLEGE LEVEL)

Springfield Technical Community College has a number of courses that aid students with deficiencies in specific subject areas. These courses, all with course numbers below 100, are intended to bring the student's skill to a level where the student will be able to accomplish the college-level work. It is the policy of the College that, relative to developmental courses (non-college levels), the following shall apply:

1. Academic credit will be awarded for developmental courses but will not count for graduation credit.
2. Developmental courses shall not be calculated into a student's quality point average on a semester basis nor shall such grades be calculated into a student's cumulative quality point average.
3. All registrations for developmental courses shall appear on student transcripts.

CLASS ATTENDANCE/TARDINESS

The faculty of the College has voted to allow each instructor to set his/her own classroom attendance policy. All students are required to report to class on time. persistent absences and tardiness may result in grading penalties or the student's dismissal from class and a grade of WU for excessive absences. Each faculty member will notify the students in writing at the start of each semester, of the attendance policy, grading policy and course requirements. In cases of extended illness or serious accident, it is up to the instructor to determine whether or not the student will be allowed to continue in the course. It is the student's responsibility to contact the instructor promptly upon returning to the college.

The Assistant Vice President for Enrollment Management/Student Affairs must approve off-campus activities, appropriately supervised and sponsored by faculty/staff members, who justify a student's absence from scheduled classes in advance. Such activities must be justifiable on grounds consistent with the educational program of the College. Whether a student is excused from class or examination to participate in such activities is determined by the instructor concerned.

MID-SEMESTER GRADES

At mid-semester, students will be graded by each of their professors. These grades will be recorded by the Registrar and forwarded to each student's advisor during registration. These grades will not become part of a student's permanent record but are used to indicate his/her performance through the first half of the semester.

MAKE-UP EXAMINATIONS

A student failing to take a semester examination may apply in writing to the appropriate academic dean and the instructor concerned, and, subsequently, the Vice President of Academic Affairs, who may give permission to take a make-up examination. If, in their opinion, absence from the regularly scheduled examination was unavoidable, the student may take a make-up examination upon payment of a $5 fee.

If the student's absence is due to his/her religious beliefs, then the following legislation will apply—Section 28, Chapter 151C, Mass. General Laws

Any student in an educational or vocational training institution, who is unable, because of his religious beliefs, to attend classes or to participate in any examination, study, or work requirement on a particular day shall be excused from any such examination or study or work requirement, and shall be provided with an opportunity to make up such examination, study, or work requirement that he may have missed because of such absence on any particular day; provided, however, that such makeup examination or work shall not create an unreasonable burden upon such school. No fees of any kind shall be charged by the institution for making available to the said student because of his availing himself of the provisions of this section.

COURSE CHANGES (ADD/DROP)

Students are permitted to add and drop courses (subject to the approval of faculty advisors) prior to the start of the semester and during the first week of classes without penalty.

COURSE WITHDRAWAL

A student may withdraw from a course after the Add/Drop period through the twelfth (12th) week of classes with the grade of "W" (withdrawal) recorded on his/her official transcript. After the twelfth (12th) week, a letter grade will be recorded on the official transcript. Withdrawal forms require the signature of the course instructor, the faculty advisor, and the Registrar. Each semester there is a deadline for withdrawal. No refund is given for course withdrawal.

REPETITION OF COURSES

A course may be completed a maximum of three times unless departmental guidelines stipulate a fewer number. All grades will appear on the transcript, but only the last grade will be used in calculating the quality point average (QPA).

AUDITING OF CLASSES

Students may attend certain classes as auditors (i.e., without receiving credit) under the following conditions:

1. Permission must be obtained from the advisor and/or the instructor and submitted to the Registrar during the registration period, no later than the last day of add/drop.
2. All established charges for the course must be paid.
3. Priority in registration will be given to students who are registering in the course for credit.
4. Audit courses will be reflected on student's permanent record as AU.

DIRECTED STUDY

A student may take a directed study with a professor. Please see the Registrar's Office for details. The last day to submit a directed study form to the Registrar's Office is the last day of add/drop.

COLLEGE WITHDRAWAL

Students wishing to officially withdraw from the College during the semester must complete a College Withdrawal Form which must be obtained from the Registrar's Office. The student must complete this form and turn it in to the college Registrar. The Registrar is available to speak with any student who wishes to discuss the reasons for the college withdrawal. A copy of the form will be kept in the permanent file of the student. Each semester there is a deadline for withdrawal; it is usually the twelfth week of the semester.

REPLACEMENT OF DIPLOMA

In the event that a student needs to replace a diploma or certificate, the cost is $20 to order the diploma/certificate, and $10 for the cover, plus current shipping costs. The request for replacement must be made in writing; fax, phone, or email requests can not be honored. The replacement will carry the student's name at graduation unless there is documented proof of a legal name change.

ACADEMIC HONORS

DEAN'S LIST

In order to recognize above-average academic performance, a Dean's List is published each semester.

1) *Full-time students*

   Any student carrying 12 or more credits who earns a 3.3 quality point average is placed on the Dean's List, providing that student has no grade less than a "C" in that semester. The total number of credits may be earned between day and evening courses.

2) *Part-time and Continuing Education students*

   A student may be eligible for Dean's List after completing 12 credits of college-level course work and carrying 6 or more college credits within a semester, while earning a 3.3 quality point average with no grade less than a "C" in that semester. Continued eligibility for Dean's List will require 6 credits of college-level course work in each subsequent semester.

ALPHA BETA GAMMA BUSINESS HONOR SOCIETY

Alpha Beta Gamma is the national business honor society for community, technical, and junior college students. The Kappa Alpha Chapter was organized at STCC in 1996 to recognize and encourage scholarship, to provide leadership development, and to promote cooperation among business students who have completed a minimum of 12 business credits and maintained a GPA of 3.0 or higher.

PHI THETA KAPPA HONOR SOCIETY

The Alpha Psi Sigma chapter of the international honor society for two-year colleges offers membership to any student who has earned 18 graduation credits with a quality point average of 3.5. Because Phi Theta Kappa emphasizes leadership, scholarship, fellowship, and community service, members are required to perform a minimum 10 hours of documented community service per semester in order to maintain membership in good standing. There is a $65 one-time membership fee.

TALENT ROSTER OF OUTSTANDING TRANSFER STUDENTS

Since 1975, the College Board has published the Talent Roster of Outstanding Transfer Students from Two-Year Colleges. This unique service has helped more than 35,000 students continue their study toward a baccalaureate degree in their major field of interest. The Talent Roster does not provide scholarships, but it has assisted many students in gaining admission to senior institutions.

AWARDS AND SCHOLARSHIPS

At the college Commencement Exercises, Outstanding Academic Achievement awards are given to graduating seniors who have achieved a 4.0 Quality Point Average. Other awards and scholarships are given at the Honors Convocation held prior to Commencement, to those students whose academic records in their departments are outstanding, and to those who have contributed significantly to the total college community through their co-curricular participation. In addition to

awards by the academic departments and divisions, College-wide scholarships and awards include:

• Alumni Association Scholarships; • Amy H. Carberry Scholarship; • Athletic Excellence Awards; • Board of Higher Education Scholarships; • Carl F. Junker Scholarships; • Co-Curricular Award; • Dan Roulier Single Parent Scholarships; • Dean of Students Scholarship; • Edmond P. Garvey Awards; • Ernest J. Henderson Scholarship; • Eugene A. Pederzoli Scholarshi; • Evelyn T. and Eugene Dilizia Scholarship; • John H. Dunn Scholarship; • Joseph J. Cooligan Award; • Joseph J. Deliso Sr. Scholarships; • Kenneth L. Bonardi Jr. Scholarship; • Lee Tuthill Scholarships; • Lucille Goodson Parks Award; • Mary E. O'Leary Scholarship; • MassPower Scholarship; • Ray M. Di Pasquale Scholarship; • Robert M. Pasini Memorial Scholarship; • STCC Non-Traditional Scholarship; • Springfield Industrial Association Scholarships; • Tazzini Family Scholarship; • Teresina B. Thompson Award; • Trudie David Scholarship; • Virginia M. Smith Scholarship; • William DeRosia Scholarship; • WMECO Scholarship; • Yolande S. Croteau Scholarship

COMMENCEMENT HONORS

Academic honors are bestowed on those students at Commencement who have distinguished themselves academically at the College.

1. The residency requirement for the awarding of *Honors* (3.3 to 3.69), *High Honors* (3.7 to 3.89), and *Highest Honors* (3.9 to 4.0) has been changed from 30 credits in residence to a minimum of 24 credits. This affects graduates of degree and certificate programs and recipients of certificates of completion (24-29 credits).
2. The residency requirement for eligibility for the 4.0 Outstanding Academic Achievement Award also has been changed from 30 credits in residence to 24 credits. Graduates of degree and certificate programs and recipients of certificates of completion (24-29 credits) are eligible.

GRADUATION RATE

The Student Right to Know (SRTK) graduation rate for full-time, first-time freshmen who entered Springfield Technical Community College in the fall of 2001 was 24%, with a four-year average of 24%. An additional 18% of these students transferred to other institutions prior to completing their STCC program, with a four-year average of 13%. This full-time, first-time freshman population represents 53% of the fall 2001 incoming class.

Student Information and Services

SERVICES AND RESOURCES

ACADEMIC COMPUTING SERVICES

STCC provides its students with exceptional and modern academic computing services. Over 790 PC and 130 Macintosh computers in 43 labs throughout the campus are dedicated to student use. STCC is the only college in the area with an IBM AS/400 minicomputer dedicated to academic use. All computer labs are built around fast ethernet networks which are connected to the campus fiber optic network infrastructure. As part of a National Science Foundation grant, every computer has direct, high-speed Internet access. Additionally, every incoming student is given an e-mail account. Staff are readily available in the computer labs to answer questions and assist students. The labs are supported by three highly-skilled, certified computer/network engineers.

FINE ARTS GALLERY

The Amy H. Carberry Fine Arts Gallery, located on the first floor of Building 28, is open Tuesday through Friday, 12:30 to 4:30 p.m. and Saturday 10:00 a.m. to 2:00 p.m. throughout the academic year. Directed by Art Department Chair Larry Slezak, the Gallery presents approximately seven exhibits each year, featuring works by artists of local and national repute, as well as STCC student work.

ATHLETICS

Inter-Collegiate Athletics are an integral and prominent part of STCC's educational objectives. Sports are seen as vital and beneficial activities. STCC is a member in good standing of the NJCAA and MCCAC.

There are currently seven intercollegiate or club sports teams at STCC, including men's soccer, basketball, and wrestling, along with women's soccer and basketball. Golf and tennis are offered in the spring as coed sports. STCC has advanced to the national championship tournaments in men's soccer, women's soccer, men's basketball, golf, tennis, and wrestling. The 2005 women's soccer team won the NJCAA Division III National Championship.

Intra-mural and recreational activities are geared to the desires of the student population. In the past, intra-mural and recreational activities have included indoor soccer, basketball, bowling, softball, floor hockey, and volleyball.

Scibelli Hall contains a gymnasium, locker rooms, and an outstanding weight training facility. In the fitness room, there are free weights as well as machines, for beginners and experienced lifters. Open hours are posted at the beginning of each semester.

BOOKSTORE

The campus store is open every school day from 8:00 a.m. to 4:00 p.m. It is also open evenings during the first two weeks of the semester for the convenience of evening students. Books, school supplies, equipment for course work, as well as miscellaneous items are offered for sale. In addition, students can purchase their

class rings, and arrange for magazine subscriptions at discount prices. Used books are also offered at discount prices, and new and used books can be sold back throughout the year. The online campus store is located at www.stccstore.com.

CAREER SERVICES

Career Services offers employment assistance to both graduating students and alumni at each step in the career search process. From setting goals to securing employment, resources are available to help launch a successful career.

During the course of their academic programs, students are encouraged to seek assistance in career planning. Counseling is provided to help choose, change, or confirm career goals in conjunction with academic advisors and the Counseling Center. Guidance in writing cover letters and resumes and in developing interview skills necessary to the job search is available to students and alumni.

Current employment listings are available on a year-round basis covering both the public and private sectors. Job postings from state and local government as well as locally- and nationally-based companies are accessible through this office. On- and off-campus interviewing is arranged to accommodate the needs of area employers and graduating students. A Career Resource Center, dedicated to serving the needs of students and alumni, is open throughout the academic year and during the summer. Complete with resource materials, the center contains a variety of information to assist in the career search process.

All graduating students are encouraged to register with Career Services during their final semester by completing a Career Placement registration form. By doing so, students are eligible to participate in on- and off-campus company recruitment and other career placement activities. To activate his or her file during a job search, a graduate should contact this office.

The Office of Cooperative Education/Career Services also maintains a record of summer/general employment opportunities. All students are invited to utilize this resource throughout the year. This office is located on the second floor of Building 27.

COUNSELING CENTER

The Counseling Center is a student-oriented, supportive environment where you may go to receive career, academic, and/or personal counseling and related services, as well as referral services to community agencies, when appropriate. While appointments are recommended, students in crisis are seen immediately without an appointment.

Philosophy

The Counseling Center's primary mission is to assist students to explore, define, and accomplish personal, academic, and career goals. We believe in the dignity, worth, potential, and uniqueness of every individual and his or her ability to be self-directed. We are dedicated to the enhancement of the spirit and quality of life of each member of the College community. We translate these beliefs into action through providing high quality individual and group counseling services, programming focused on the developmental needs of College students, and consultative services to assist faculty and staff.

Overview of Services

- Academic counseling
- Admissions counseling
- Career counseling
- Personal counseling
- Advocacy/referral
- Consultation with faculty

Workshops/classroom presentations
Study skills/memory techniques
Career planning/promoting gender equity
Understanding your personality using the MBTI
Stress management
Controlling anxiety through biofeedback training
Coping with test/math anxiety

Support groups
Counselors will form specific support/focus groups if sufficient interest is expressed by students.

Career Counseling

Career Counseling/Career and Life Planning, which is offered free of charge to enrolled students, is part of a developmental process. It can appropriately occur at any point throughout a student's education. Its major tasks include self-assessment, career exploration, and decision-making. Specific components of these tasks include:

a.) Interests, aptitude, personality, and value assessment through interviews, psychological tests, and exercises

b.) Needs assessment related to work satisfaction

c.) Skills identification/determination of work-related skills

d.) Values clarification through tests and exercises

e.) Career exploration utilizing computer software, career reference books, and diverse resources for occupational information

f.) Decision-making related to:

1.) appropriate career choice

2.) appropriate educational program

g.) Implementation of career choice through:

1.) application/acceptance into appropriate college program

2.) utilization of support services, if necessary, until successful completion of educational objectives/graduation

Career Planning Resources

Important career planning resources include:

Career and Catalog Library

a.) Computer software related to career planning and decision-making

b.) Extensive occupational information, which helps ensure that students make an informed career choice

Discover

Discover is an Internet-based guidance and information system which helps people make important career and educational decisions. Major components include:

- research-based assessments of career-relevant interests, abilities, and job values to help individuals consider career options that are a good match for them
- a comprehensive, developmental guidance process which helps users identify their strengths and needs, make good career decisions, and build a plan based on their personal profiles
- complete, current databases of occupations, college majors, schools and training institutions, financial aid/scholarships, and military options
- information on how to develop good job-seeking skills through effective resumes, cover letters, job applications, and interviewing skills

Distinctive features and benefits of Discover

- developmental guidance process - helps users identify their strengths and needs, and builds a plan based on their personal profiles
- online inventories - provide economical and efficient assessments of a user's career-relevant interests, job values, and abilities
- World of work map - organizes vast amounts of information about occupations into six clusters based on primary work tasks, and helps users focus on preparing for meaningful and appropriate employment
- direct access to information - supports quick and easy retrieval of current, comprehensive, and meaningful information
- occupational database - provides detailed information about hundreds of occupations in the current U.S. labor market, with many ways to search the database. Related military occupations are also provided.
- majors or programs of study - provides a searchable file that includes detailed descriptions, typical college courses, high school preparation, related majors, related occupations, and types of schools that offer the programs
- educational options - helps individuals identify postsecondary education or training options that fit their career choice
- school database - provides information about virtually all two- and four-year colleges and graduate/professional schools, most career/technical schools, and a detailed search process to identify the schools that have the features each user wants
- financial aid - includes a searchable database of financial aid/scholarship sources, and provides an estimate of federal eligibility based on family or personal financial information
- job-seeking skills - helps individuals prepare for a successful job search by learning good interviewing skills, how to write a resume and cover letter, and more

Career Interests Tests/Exercises

The Career Assessment Inventory, MBTI, the Strong Interest Inventory, and other interest surveys are available in the Counseling Center at no charge to students. Each counselor can administer and interpret the instrument which seems most

appropriate for the individual. A great diversity of career planning exercises are also available related to personality, interest, needs, skills, values, career exploration, and career decision-making.

Educational Counseling

Academic Advisement—the Counseling Center is knowledgeable regarding each program in the College and can advise students on course selections and intracollege transfer requirements and procedures.

Academic Assistance—The Counseling Center assists students in developing appropriate study skills through workshops and individual counseling. When students are experiencing academic difficulties, the Counseling Center may also play a role in bringing student and instructor together to help resolve academic and interpersonal difficulties.

Personal Counseling

Supportive Counseling—Counselors are available to offer supportive counseling to students experiencing difficulty in their academic work due to personal crises or circumstances which are causing anxiety and stress. Counselors provide a confidential and structured setting in which students find assistance and support in dealing with the problems they are experiencing.

Referral to outside agencies—Students exhibiting withdrawal, disruptive behavior, extreme nervousness, or other unusual behaviors, may have severe emotional problems which require long-term therapy. In such cases, students are referred to community or private agencies for evaluation and follow-up. Counselors maintain relationships with community mental health professionals in order to make the referral process as easy as possible for STCC students.

Workshops and Courses—Counselors will be presenting a series of workshops over the year to promote academic and personal growth. Times and places for these workshops will be listed in *The STCCler*, and posted in all buildings. Some topics of these workshops are Assessing Your Study Skills, Memory Techniques, Improving Midterm Grades, Preparing for Finals, and Personality Assessment Using the MBTI.

Confidentiality and Its Limits

Underlying the counseling relationship is the principle of confidentiality. This principle assures you that the facts and opinions you reveal about yourself in the course of counseling will be held strictly private, and will not be revealed to others without your prior written permission.

However, there are several exceptions to this principle of which you need to beaware. The exceptions include:

professional consultation
child abuse/neglect
elder abuse/neglect
threatening to harm yourself
threatening to cause physical violence to another
information related to the planned commission of a crime

Legal cases related to:
child custody
hospitalization
court-ordered evaluations

Please discuss with your counselor. More extensive written materials are available upon request, including the state regulations.

CHILD CARE CENTER

Armory Square Child Care, Inc. is a private, non-profit child care center operating on the campus of STCC. The center opened in the fall of 1984, to serve the children of students, faculty, and staff of STCC, and the general public. Located in Building 14, first floor, the center is licensed to accommodate up to 40 children, from ages 2 years 9 months to 6 years of age, during the academic year, and summer with sufficient enrollment. Breakfast, lunch, and an afternoon snack are provided.

The Armory Square Child Care program is based on developmentally appropriate practice as set forth by the National Association of Education for the Young Child (NAEYC). The center, which is NAEYC accredited, provides a variety of experiences designed to build the child's self-esteem and develop social skills. There is a $15 application fee. Vouchers are accepted. The telephone number is 737-3455 or 755-4955. The Child Care office is located in 14/103.

OFFICE OF DISABILITY SERVICES

The College provides support services and academic accommodations for any student who has a documented physical, emotional, and/or learning disability. Any full- or part-time day or evening student with a documented disability is eligible for services. Academic accommodations provide a student with a disability equal access to programs and services at STCC. Accommodations are designed to meet specific needs of students with supported recommendations from licensed professionals. Counselors work in coordination with faculty and vocational rehabilitation agencies. Some specialized equipment is available for loan.

Learning Disabilities

A Learning Disabilities Specialist is available to work with students with learning disabilities. If a student is experiencing difficulty in reading, comprehending, or processing information, a learning disability may exist. The Specialist will, as necessary, offer students direct assistance, refer for evaluation and testing to determine the nature of the learning problem and strategies for improvement, and work with faculty and students in modification of teaching and learning methods to promote student success.

Adaptive Computer Lab

The purpose of the Adaptive Computer Technology Lab on campus is to provide equal access to computing for students with disabilities who can benefit from current technological advances. The lab is staffed by a technician and is available for use by any student with a disability who has completed an orientation to the equipment. The lab is equipped with a book scanner, speech synthesizers, a speech recognition system, closed circuit television, and various adaptive software programs. Adaptive equipment is available in the Student Success Center and in some labs on campus.

HEALTH SERVICES

Confidential, professional services are provided by the Health Services Office to all students. The non-emergency phone number is (413) 755-4230. Emergency

services are available by dialing extension 3911. Listings of periodic health and wellness programs are available at the office and on the STCC website.

HOUSING

Since the overwhelming majority of our students live in this area and commute, the College does not operate residence halls. However, a current list of apartments and rooms available in private homes is maintained for students whose permanent residence is at a distance. The College does not inspect, supervise, or recommend student housing facilities. Housing arrangements are the sole responsibility of the student. The Student Activities and Development Center will assist students who have not been able to make suitable arrangements from the current housing list, which is available upon request.

MESSAGES

In the event of an off-campus emergency requiring the attention of a student, efforts will be made by the Student Services Office to contact the student. Call the office at 755-4029. Only emergency messages can be relayed to students. The College does not have a public address system. Only a serious emergency can justify interrupting a class. If a student is not in the class, it is impossible to locate and notify the student.

OVATIONS

The Ovations series of educational and cultural special events is sponsored by the Chicopee Savings Bank Endowment for Academic Excellence, the STCC Honors Program, and the Office of Academic Affairs. Periodically throughout each semester Ovations brings to the College locally- and nationally-acclaimed writers, artists, dancers, musicians, and experts in the fields of science and health. In addition, Ovations offers film presentations, art exhibits, and other such events that will broaden students' exposure to the arts and sciences. While Ovations is designed primarily for STCC students, the programs offered are advertised and made available to the Greater Springfield community.

PARKING

Each year the College attempts to secure a maximum number of parking spaces in the general area of the campus for student parking, and in September the College publishes an updated list of independent parking areas near by. Parking spaces in many of these lots are controlled by the College. There is sufficient parking available on these lots for all students of the College. Because the College is located on a National Historic Site, there are many areas on the campus where parking is not allowed; however, peripheral lots are located within easy walking distance of the classroom buildings. A fleet of STCC shuttle vans makes continual runs to each of these lots with pick-up and drop-off points on campus, throughout the day when classes are in session.

RETURNING ADULT SERVICES

Returning Adult Services at STCC assists non-traditional students to find peer support, encouragement toward academic success, and referrals that will facilitate a student's adjustment to college and its challenges. Located in the Student

Success Center, these services can be the bridge between college, work, home, and family for non-traditional students.

STUDENT ACTIVITIES AND DEVELOPMENT

The Student Activities and Development program is designed to complement the academic program by providing a variety of meaningful educational, cultural, and social experiences. The Student Activities and Development office assists students and faculty in the planning of cocurricular programs and in the development of student organizations. The staff of the Student Activities and Development office, with student leaders, provides support to special planning groups and interested students in the promotion of activities on campus. Additionally, access to off-campus events and attractions is available through discounted ticket sales and bus trips.

Whenever the College is closed, due to weather conditions or an emergency situation, all extra-curricular activities are automatically cancelled to ensure the safety of students and others.

The Student Government Association (SGA) is the forum through which students' viewpoints, concerns and input into campus governance are presented. Most of the positions are filled by student volunteers who are interested in gaining valuable experience while improving campus life. A student body president, student trustee, and student body vice president are elected in April to fill one-year terms. Nomination papers are available in March for interested students. Requirements vary for these positions.

POLICIES AND PROCEDURES

STUDENT RIGHTS AND RESPONSIBILITIES

This statement of rights and responsibilities is designed to clarify those rights which the student may expect to enjoy as a member of the college student body, and the obligations which admission to the college places upon the student.

GOAL

To provide an atmosphere where solid intellectual and academic development is provided.

OBJECTIVES

A. Student Responsibilities

1. To be knowledgeable of and comply with the directives, regulations, and laws established by the Massachusetts Board of Higher Education, Springfield Technical Community College Board of Trustees, the college administration and the Student Community Council.
2. To respect the rights of individuals and groups to independent action as long as those rights do not interfere with the parallel rights of others — minorities and majorities alike — including the avoidance of action interfering with those educational processes under the auspices of the college.
3. To be knowledgeable of and comply with the directives, regulations, and laws of duly constituted civil authorities.

B. Student Rights

1. To have the opportunity to pursue higher education.
2. To have the freedom to exercise the rights of citizenship, association, inquiry, and expression.
3. To have the right to privacy and confidentiality.
4. To have the right of voting representation on all recommendations to the President of the college on matters of concern, including but not limited to, academic standards, student services, and curriculum changes.
5. To have the right of quality education, including but not limited to:
   a. The right to competent instruction in courses and programs offered by the college.
   b. The right to assistance in overcoming educational, cultural, emotional and economic disadvantages which hinder the educational process.
   c. The right to receive in writing from each faculty member during the first week of classes of every semester, a brief, written course description and outline of the material to be covered, course requirements including a specific list of information and techniques which the student is expected to acquire, attendance policy, and the grading system to be utilized.
6. To have the right to fair and equal treatment, including but not limited to instruction, evaluation, and services by faculty, staff, students, and administrators.
7. To have the right to procedural due process in grievance and disciplinary hearings.

Approved by the STCC Board of Trustees, May 29, 1984.

ACADEMIC HONESTY POLICY

Communication of knowledge and a free exchange of ideas, two essential aspects of a college community, require a fundamental standard of honesty. Students and faculty must be able to expect that thoughts and work presented for credit are the property of the person presenting them. To safeguard these principles, it is important to clarify the rules and procedures regarding academic honesty.

1.) Academic dishonesty -- Students must refrain from all forms of academic dishonesty including but not limited to:
   a.) Cheating on quizzes and examinations. Cheating is to act dishonestly or fraudulently in performing assignments, tests, or quizzes; or to violate established and accepted rules of behavior in performing assignments, tests, or quizzes.
   b.) Abetting others in cheating
   c.) Appropriating other students' work
   d.) Plagiarizing written assignments. Plagiarism occurs when the creative work of another individual is imitated or used without authorization, or when the creative work of someone else is represented as one's own work. Plagiarism includes but is not limited to:

   • Making a direct copy of another's work without appropriate citation. This includes books, articles, the work of other students, and information from the World Wide Web.

   • Paraphrasing the work of another so that the essential meaning and/or progression of ideas are maintained in spite of minor changes

- Resubmitting one's own work as new, following previous submission for credit in another class or other context
- Presenting work as one's own that was produced in conjunction with others, such as another student or a tutor, without including appropriate citation.
- Closely imitating, without citation, the creative work of another in a creative work of artistic merit.

e.) It should be made clear that the continuously expanding capabilities of electronic media represent increased opportunities for plagiarism. Students should be aware that fraudulently presented material from electronic sources, such as the World Wide Web, will be treated as seriously as that from any other source.

2. Consequences of academic dishonesty

a.) Faculty who find students in violation of honesty standards shall determine the appropriate response. Punishment may include dismissal and/or failing grade in the course.

b.) Faculty will report incidents of academic dishonesty and the action taken in response to them in writing to the Assistant Vice President for Enrollment Management/Student Services.

c.) The Assistant Vice President may elect to pursue further action up to and including dismissal from the college.

d.) Students who believe themselves to be unjustly accused or punished for academic honesty violations may pursue the matter through the student grievance procedure.

DRUG AND ALCOHOL POLICY

On December 12, 1989 Congress amended Title XII of the Higher Education Act of 1965. This amendment, known as the "Drug-Free Schools and Communities Act of 1989", requires that every educational institution receiving federal funding certify its adoption and implementation of programs designed to prevent use of illegal drugs and abuse of alcohol by students and employees. Prior federal law applicable to the college regulated only criminal drug activity of federal grant-funded employees and recipients of federal aid.

Springfield Technical Community College, in accordance with legal mandates and its philosophy of establishing and maintaining an environment of learning and a supportive environment in which to conduct the business and mission of the college, will enforce the following policies:

1.) The unlawful manufacture, distribution, dispensing, possession or use of alcohol or of a controlled substance is prohibited on the campus of STCC or as part of any college-related activity. Students who violate these restrictions shall be subject to appropriate disciplinary action, up to and including suspension, expulsion, or discharge, and shall also be subject to referral for criminal prosecution. Where students are convicted of violating a criminal drug or alcohol statute related to a college activity, the college shall ordinarily expel or discharge the offender absent mitigating circumstances. Mitigating circumstances shall include, but shall not be limited to, considerations of handicap under federal and state law.

2.) STCC shall cooperate in the enforcement of federal and state laws concerning illegal drugs and alcoholic beverages. Massachusetts statutes pertaining to illegal drugs and alcohol include:

- Mass. General Laws, Chapter 94C (Controlled Substances Act)
- Mass. General Laws, Chapter 272, Section 59 (Public Drinking)
- Mass. General Laws, Chapter 90, Section 24 (Operating Under the Influence, Open Containers)

Third offense underage possession or consumption of any alcoholic beverage following progressive discipline for the first two offenses will result in automatic suspension.

Prescribed penalties under Chapter 94 range from mandatory probation for a first conviction of a class E substance, e.g., marijuana, to a period of imprisonment of up to two years and a fine of $2,000 for each subsequent conviction related to sale or distribution. Prescribed penalties under Chapter 90, Section 24 range from a fine of $100 to imprisonment for not more than two years and a fine of $1000. Federal judicial guidelines also exist which suggest penalties for violation of federal criminal statutes related to drugs and alcohol.

3.) Parents or legal guardians of students under 21 years of age will be notified each time the student has been determined to be in violation of the campus alcohol policy.

4.) No Student Activities funds shall be used to purchase alcoholic beverages. STCC's policy additionally prohibits alcoholic beverages at any college event (on- or off-campus) that is intended for students or student participation. A "college event" is one that utilizes college facilities or college funds, or is represented as being a college function.

All purchase orders for student events will positively exclude payments for alcoholic beverages. Faculty and professional staff who serve as advisors or chaperones to such events should understand that they will be expected to monitor the implementation of the Student Alcohol Policy.

5.) The college will present campus-wide drug and alcohol education programs on an annual basis. This is in addition to other educational opportunities available in current or future academic offerings.

6.) For any member of the STCC community who is experiencing substance abuse problems, STCC stands ready to offer supportive services and referral for treatment as appropriate and rehabilitation counseling programs. Contact the Counseling Center, Health Services, and Student Services Office for assistance.

7.) *Treatment Covered by Student Medical Insurance*

Massachusetts General Laws, Chapter 15A, 7B (St. 1988), Chapter 23, 22, and 117 Code of Massachusetts Regulations Section 3.04 require that students certify their participation in a qualifying student health insurance program, or in a health benefits program with comparable coverage. Students who do not possess adequate medical insurance must purchase the Massachusetts Community College Student Accident and Sickness Insurance Plan. This plan provides the following benefits related to drug and alcohol abuse:

Hospital Confinement Benefits

Drug Abuse Benefit – When a covered person is confined in a legally-operated and duly-accredited public or private facility for the care or treatment of drug abuse, the Company will pay the same benefit provided for other illnesses. The coverage is not to exceed 30 days in any policy year for the treatment of drug abuse, and is subject to the policy aggregate maximum benefit of $25,000. Please refer to the Massachusetts Community College Student Accident and Sickness Insurance Plan policy for additional information.

Non-Hospital Confinement Benefits

Mental Illness, Alcohol and Drug Abuse Benefit – The Company will pay for the treatment by a fully-licensed psychiatrist, psychologist, psychiatric nurse, or independent clinical social worker. This coverage is not to exceed $50 per visit, for an aggregate benefit of $500, during the policy period for treatment of a mental or nervous disorder, or for alcoholism or drug abuse. Please refer to the Massachusetts Community College Student Accident and Sickness Insurance Plan policy for additional information.

8.) The College shall conduct a yearly review of these policies and programs, and implement changes as necessary.

TECHNOLOGY RESOURCES POLICY

This policy for students, faculty, staff (full-time and part-time) and guests - "users"- at STCC includes the use of computers, printers and other peripherals, programs, data, local and wide area networks, and the Internet. Individual schools or departments may choose to issue additional policies governing the use of technology resources. Use of STCC technology resources by any student, faculty, staff or guest shall constitute acceptance of the terms of this policy and any such additional policies.

User responsibilities: It is the responsibility of any person using STCC technology resources to read, understand, and follow this policy. In addition, users are expected to exercise reasonable judgment in interpreting the policy and making decisions about the use of technology resources. Any person with questions regarding the application or meaning of this policy should seek clarification from appropriate supervisors. Failure to observe this policy may subject individuals to disciplinary action, including termination of employment.

Acceptable use: STCC firmly believes that technology resources empower users and make their jobs more fulfilling by allowing them to deliver better services at lower costs. As such, students, faculty, staff and guests are encouraged to use technology resources to the fullest extent in pursuitof STCC's goals and objectives.

Unacceptable use: Unless such use is reasonably related to a user's job, it is unacceptable for any person to use STCC technology resources:

- in furtherance of any illegal act, including violation of any criminal or civil laws or regulations, whether state or federal
- for any political purpose
- for any commercial purpose
- to send threatening or harassing messages, whether sexual or otherwise
- to access or share sexually explicit, obscene, or otherwise inappropriate materials

- to infringe any intellectual property rights
- to gain or attempt to gain unauthorized access to any computer or network
- for any use that causes interference with or disruption of network users and resources, including propagation of computer viruses or other harmful programs
- to intercept communications intended for other persons
- to misrepresent either STCC or a person's role at STCC
- to distribute chain letters
- to access online gambling sites
- to libel or otherwise defame any person, or
- to consume excessive bandwidth as determined by STCC officials in their sole discretion

Furthermore, it is unacceptable for any student to use STCC technology resources to violate the Student Code of Conduct as set forth in this catalog.

Data confidentiality: In the course of performing their jobs, STCC employees often have access to confidential or proprietory information, such as personal data about identifiable individuals or commercial information about business organizations. Under no circumstances is it permissable for employees to acquire access to confidential data unless such access is required by their jobs. Under no circumstances may employees disseminate any confidential information that they have rightful access to, unless such dissemination is required by their jobs. The confidentiality of student educational records shall additionally be subject to the requirements of the Family Educational Rights and Privacy Act (FERPA).

Copyright protection: Computer programs are valuable intellectual property. Software publishers can be very aggressive in protecting their property rights from infringement. No one is permitted to use any software unless it is properly licensed to STCC. In addition to software, legal protections can also exist for any information published on the Internet, such as text and graphics on a website. As such, it is important that users respect the rights of intellectual property owners. Users should exercise care and judgment when copying or distributing information that could reasonably be expected to be copyrighted.

Computer viruses: Users should exercise reasonable precautions in order to prevent the introduction of a computer virus into the local area or wide area networks. Virus scanning software approved by the IT department will be used at all times and, specifically, to check any software downloaded from the Internet or obtained from any questionable source. In addition, executable files (program files that end in .exe) should not be stored on or run from network drives unless authorized,installed, and maintained by the IT department. It is a good practice to scan floppy disks periodically to see if they have been infected. Please contact the Help Desk with any questions.

Security: Most desktop computers are connected to a local area network, which links computers within STCC and, through the wide area network, to the Internet. It is critically important that users take particular care to avoid compromising the security of the network. Users shall not connect any device to any STCC computer equipment or to the STCC campus network without the explicit permission and involvement of the IT department. This includes, but is not limited to, servers,

personal computers, notebook/laptop computers, printers, hubs, switches, routers, firewalls, wireless access points, etc.

Because the installation of unauthorized software can severely compromise computer and network security, users are not permitted to install any software on STCC computers without the permission of management and the involvement of IT personnel. Under no circumstances will IT personnel be responsible for the installation and/or configuration of software or hardware on any non-STCC equipment.

Users should never share their passwords with anyone else, and should promptly notify IT personnel if they suspect their passwords have been compromised. In addition, users who will be leaving their PCs unattended for extended periods should either log off the network or have password-protected screen savers in operation. Finally, no user is allowed to access the Internet or other external networks via modem without specific permission from management and the involvement of the IT department.

Email: When using email, there are several points users should consider. First, because email addresses identify the organization that sends the message (username@stcc.edu), users should consider email messages to be the equivalent of letters sent on official letterhead. For the same reason, users should ensure that all emails are written in a professional and courteous tone. Finally, although many users regard email as being like a telephone in offering a quick, informal way to communicate, users should remember that emails can be stored, copied, printed, or forwarded by recipients. As such, users should not write anything in an email message that they would not feel just as comfortable putting into a memorandum.

No expectation of privacy: STCC technology resources are the property of STCC or the Commonwealth of Massachusetts, and are to be used in conformance with this policy. When reasonable and in pursuit of legitimate needs for supervision, control, and the efficient and proper operation of the workplace, STCC will exercise the right to inspect any user's computer, any data contained in it, and any data sent or received by that computer. Use of STCC technology resources constitutes express consent for STCC to monitor and/or inspect any data that users create or receive, any messages they send or receive, and any websites that they access.

INTERNET POLICY

1.) Acceptable Use – The purpose of the Internet is to facilitate communications in support of research and education by providing access to unique resources and an opportunity for collaborative work. To remain eligible as a user, the use of your account must be in support of and consistent with the educational objectives of Springfield Technical Community College. Use of the Internet is for academic purposes only.

    Transmission of any material in violation of any United States or state regulation is prohibited. This includes, but is not limited to, copyrighted material, threatening or obscene material, or material protected by trade secret. Use for commercial activities is prohibited. Use for product advertisement or political lobbying is also prohibited.

2.) Privilege – The use of the Internet is a privilege, not a right; it is to be used for academic purposes only. Inappropriate use, including any violation of these conditions and rules, may result in cancellation of the privilege, as well as

possible civil and/or criminal sanctions. The account holder or user is solely responsible for any and all materials viewed, stored, or transmitted from Springfield Technical Community College based computers. STCC expects, however, that all account holders or users will comply with all College rules and regulations related to Internet use, as well as applicable state and federal law. If Springfield Technical Community College receives notice of a violation of its rules, and/or state or federal law, STCC reserves the right to deny, revoke, suspend, or close any user account. Further, no account holder or user should have an expectation of privacy over e-mail transmissions and the College reserves the right to block any "mass" e-mail transmissions.

3.) Security

a.) Security on any computer system is a high priority, especially when the system involves many users. A user must never allow others to use his/her password. Users should also protect their passwords to ensure system security and their privileges and ability to continue use of the system. Attempts to log on to the Internet with other than your own account will result in cancellation of user privileges.

b.) If you feel you can identify a security problem on the Internet, you must notify a system administrator.

4.) Vandalism and Harassment

a.) Vandalism and harassment will result in cancellation of user privileges.

b.) Vandalism is defined as any malicious attempt to harm, modify, and destroy data of another user, Internet, or other networks that are connected to the Internet backbone. This includes, but is not limited to, the uploading or creating of computer viruses or intentionally disrupting network traffic or crashing the network and connected systems.

c.) Harassment is defined as the persistent annoyance of another user or the interference of another user's work. Harassment includes, but is not limited to, the sending of unwanted mail, Trojan horses, logic bombs, trapdoors, backdoors, viruses, and worms.

5.) Monitoring – Springfield Technical Community College reserves the right to review any material on user accounts and to monitor fileserver space. The system administrator has the right to restrict or terminate network and Internet access at any time for cause. The system administrator further has the right to monitor network activity in any form that it sees fit to maintain the integrity of the network.

6.) No Warranties – Springfield Technical Community College makes no warranties of any kind, whether express or implied, for the service it is providing. STCC will not be responsible for any damages a user suffers. This includes loss of data resulting from delays, no-deliveries, misdeliveries, or service interruptions caused by STCC negligence or by the user's errors or omissions. Use of any information obtained via the Internet is at the user's own risk. STCC specifically denies any responsibility for the accuracy or quality of information obtained through its services. All users need to consider the source of information they obtain and consider how valid the information may be.

7.) Procedures for User

a.) Student users must sign in legibly on the appropriate log each time they use the network.

b.) Users shall not play games or use the computer resources for other non-academic activities.

8.) Encounter of Controversial Material – On the Internet it is impossible to control the content of data and a user may discover controversial materials. If you feel you are being harassed or the system is being used in an appropriate manner, it is your responsibility to notify the systems administrator. STCC shall not be held liable for any decision to restrict or regulate access to Internet materials nor for the student's encounters, access, or use of any inappropriate or controversial material.

9.) Network Etiquette – All users are expected to abide by the generally accepted rules of network etiquette. These include, but are not limited to, the following:

a.) Do not reveal your personal address or phone number or those of students or colleagues.

b.) Note that electronic mail (e-mail) is not private. People who operate the system do have access to all mail. Messages relating to or in support of illegal activities will be reported to the authorities and will result in the loss of user privileges.

c.) Do not use the Internet in such a way that you would disrupt the use of the network by other users.

d.) All communications and information accessible via the Internet should be assumed to be the private property of those who put it on the network.

10.) Penalties for Improper Use – When improper use is detected, the user may, depending on the severity of the abuse:

- Receive an oral warning
- Receive a written warning
- Receive a written warning and/or interim suspension of privileges and notice of a hearing within two working days
- Have privileges formally withdrawn after a hearing
- Face criminal prosecution if possible breach of law is involved

Further, intentional, or unintentional misuse of this service by an account holder or user may result in a violation of civil and/or criminal statues, including, but not limited to, the Electronic Communications Privacy Act of 1986, the Family Educational Rights and Privacy Act, Massachusetts' Wire Tap and/or Privacy Laws, defamation, copyright and/or trademark infringement laws, and/or sexual harassment or discrimination laws.

STUDENT CODE OF CONDUCT

When students begin their career at Springfield Technical Community College, they become members of the college community – a community of people whose common goal is the pursuit of learning and training. All members of the STCC community – students, faculty, staff, and administrators – have rights. These rights, however, are not to infringe on the rights of others.

Students have the right to organize social, religious, and political groups and to have invited guests as speakers on campus. College facilities are available for such programs, consistent with established guidelines and procedures. However,

STCC condemns any deliberate action which promotes racial, ethnic, gender-specific, or religious hatred.

The following are core values: honesty, integrity, respect, and hard work. These values, coupled with academic achievement, lead to student success.

Proscribed Conduct

A. Jurisdiction of the College

Generally, college jurisdiction and discipline shall be limited to conduct which occurs on college premises, at college-sponsored events, or during activities, which adversely affect the college community and/or the pursuit of its objectives, on- or off-campus.

B. Conduct Rules and Regulations

Any student found to have committed the following misconduct is subject to disciplinary sanctions. The following list is not all-inclusive of prohibited behaviors, but serves as a guideline:

1. Acts of dishonesty including but not limited to: cheating, plagiarism or other forms of academic dishonesty; furnishing false information to any college official or faculty member; forgery, alteration, or misuse of any college document, record, or instrument of identification; tampering with the election of any college-recognized student organization
2. Disruption or obstruction of teaching, research, administration, disciplinary proceedings, or other college activities, including public-service functions on- or off-campus, or other authorized non-college activities, or when the act occurs on college premises or at campus-sponsored activities
3. Physical abuse, verbal abuse, threats, intimidation, harassment, coercion and/or other conduct which threatens or endangers the health or safety of any member of the campus community, i.e. "hate crimes"
4. Attempted or actual theft of and/or damage to property of the college (including library materials) or property of a member of the college community or other personal or public property
5. Hazing, defined as an act which endangers the mental or physical health or safety of a student, or which destroys or removes pulbic or private property, for the purpose of initiation admission into, affiliation with, or as a condition for continued membership in a group or organization
6. Failure to comply with directions of college officials or law enforcement officers acting in performance of their duties, and/or failure to identify oneself to these persons when requested to do so
7. Unauthorized possession, duplication, or use of keys to any college premises or unauthorized entry to or use of college premises
8. Violation of published college policies, rules or regulations, including parking, motor vehicle movement, or compliance in completing health records. Full-time students with incomplete health records will not be allowed to register for subsequent semesters until their health records are complete with Health Services. Students in Health and Nursing disciplines who have incomplete health records will be removed from clinical affiliations and labs, with the possibility of further disciplinary action.

9. Violation of federal, state or local law on college premises or at college-sponsored or college-supervised activities
10. Use, possession or distribution of narcotics or other controlled substances except as expressly permitted by the law
11. Use, possession or distribution of alcoholic beverages except as expressly permitted by the law, or public intoxication
12. Possession of firearms, explosives, other weapons, or dangerous chemical agents on college premises
13. Participation in a campus demonstration which disrupts the normal operations of the college and infringes on the rights of other college community members, or leading or inciting others to disrupt scheduled and/or normal activities within any campus building or area
14. Obstruction of the free flow of pedestrian or vehicular traffic, i.e., skateboarding, on college premises or at college-sponsored or supervised functions
15. Conduct which is disorderly, lewd, or indecent; breach of peace; or aiding, abetting, or procuring another person to breach the peace on college premises or at functions sponsored by or participated in by the college
16. Theft or other abuse of computer time, including but not limited to: unauthorized entry into a file to use, read, or change the contents, or for any other purpose; unauthorized use of another individual's identification and password; use of computing facilities to send or receive obscene or abusive messages; use of computing facilities to interfere with normal operation of the college computing system or any other computing system
17. Abuse of the campus judicial system, including but not limited to: failure to obey the summons of a Student Conduct/Advisory Board or college official; falsification, distortion, or misrepresentation of information before a Student Conduct/Advisory Board; disruption of or interference with a judicial proceeding; institution of a judicial proceeding knowingly, without cause; attempting to discourage an individual's proper participation in, or use of, the judicial system; attempting to influence the impartiality of a member of a Student Conduct/Advisory Board prior to or during the course of the judicial proceeding; harassment (verbal or physical) and/or intimidation of a menber of a Student Conduct/Advisory Board or a witness or victim, prior to, during, and/or after a judicial proceeding; failure to comply with sanctions imposed under the STCC Student Code of Conduct

STCC has a "zero tolerance policy concerning:

1. Serious acts against persons, including, but not limited to:
   - Hate crimes
   - Murder
   - Physical assault
   - Rape or sexual assault
2. Serious acts against property, including, but not limited to:
   - Arson
   - Destruction of property, including electronic property (i.e., computers)
   - Illegal occupation of a building

3. Possession or discharge of illegal weapons or dangerous chemicals
4. Alcohol or drug sale, distribution, and inebriation on campus "...third offense underage possession or consumption of any alcoholic beverage following progressive discipine for the first two offenses." Board of Higher Education Alcohol Policy, 1999
5. Serious acts jeopardizing the safety and lives of others, including, but not limited to: creating or falsely reporting of bombs; driving under the influence of drugs or alcohol; hazing; inciting a riot; tampering with fire or safety equipment (including falsely pulling a fire alarm); resisting arrest

Immediate interim suspension, pending a hearing by the STCC Student Conduct/ Advisory Board, will occur whenever the accused student is deemed a safety threat.

C. Violation of Law and College Discipline

If a student is charged only with an off-campus violation of federal, state, or local laws, but not with any other violation of this Student Code of Conduct, disciplinary action may be taken and sanctions imposed for grave misconduct, which demonstrates flagrant disregard for the college community. The college reserves the right to proceed with disciplinary action at the college during pending criminal proceedings and will not be subject to challenges on the ground that criminal complaints involving the same incident have been dismissed or reduced.

College disciplinary proceedings may be instituted against a student charged with violation of a law, which is also a violation of this Student Code of Conduct. For example, if both violations result from the same factual situation, the college may institute disciplinary proceedings without regard to the pending civil litigation in court or criminal arrest and prosecution. Proceedings under this Student Code of Conduct may be carried out prior to, simultaneously with, or following civil or criminal proceedings off campus.

When a student is charged by federal, state, or local authorities with a violation of the law, the college will not request or agree to special consideration for that individual because of his or her status as a student. If the alleged offense is also the subject of a proceeding before the Student Conduct/Advisory Board for violation of the Student Code of Conduct, however, the college may advise off-campus authorities of the existence of the Student Code of Conduct and how such matters will be handled internally. The college will cooperate fully with law enforcement and other agencies in the enforcement of criminal law on campus and in the conditions imposed by criminal courts for the rehabilitation of student violators. Individual students and faculty members, acting in their personal capacities, remain free to interact with governmental representatives, as they deem appropriate.

DISRUPTIVE BEHAVIOR

Behavior which disrupts the establishment or maintenance of the learning environment may result in the student being removed from the classroom by the instructor. The student may be subject to further punitive action by Student Services.

The disruptive student has a right:

1. to be clearly informed in writing of the problem or behavior in question;
2. to have a clear understanding of the consequences of not modifying the condition or behavior; and

3. to have an opportunity to modify the behavior.

Procedure

Faculty should attempt to discuss any disciplinary problems with the student before seeking assistance from the Student Services office, except in the case of student's demonstration of threatening behavior. In this case, faculty should contact Campus Security immediately.

If a student continues to be non-compliant but not threatening, the faculty member should a.) complete the disruptive behavior notification form with suggestions for improvedment; b.) request for disciplinary withdrawal form - send the withdrawal form to the Registrar's Office, notify the student that he/she has been withdrawn from class, and send a copy of the withdrawal to the Student Services office within two days of the meeting with the student. If students commit any of these infractions they should be referred to Student Services on the second floor of Building 27.

DISCIPLINARY PROCEDURES

The Assistant Vice President for Enrollment Management/Student Affairs, or designee, is charged with administering the Student Code of Conduct and rendering a decision within five academic days of the incident.

Students may be either suspended or placed on probation for violation of established college policy. If a student has been placed on Disciplinary Probation by the Assistant Vice President for violation of established college policy, a letter will be placed in his/her personal file in the Student Services office. If the student does not re-offend throughout the remainder of his/her tenure at STCC, the letter will be discarded, However, if the student re-offends a second time, s/he will be subject to the Disciplinary Procedures outlined below.

It is the responsiblity of STCC students to make their guests who visit the campus aware of these policies. Any first offense of those listed above will result in a verbal warning and possible probation. While a student found in violation of any of the aforementioned offenses shall remain a student, the student may also be required to attend counseling (on campus or off campus), participate in a workshop related to the offense, or complete a research paper on the topic of the offense.

Any offense of those listed above may result in suspension or possible expulsion. The student will forfeit his/her student status and will not be allowed to reapply for admission to the college without the approval of the Assistant Vice President. A student may be permanently expelled from the college for gross violation of the Student Code of Conduct.

If the student in question wishes, an appeal of the decision may be made through the Student Grievance Procedure. In cases of suspension or dismissal, the student wishing to appeal may do so at Level 2, Step 1 of the Student Grievance Procedure. In such instances, the Grievance Committee's decision shall be rendered within seven calendar days from the receipt of the appeal.

JUDICIAL POLICIES

A. Complaints and Hearings

1. Any member of the college community may file complaints against any student for misconduct. Complaints shall be prepared in w riting and directed to

the Board Chairperson responsible for the administration of the college's Student Conduct/Advisory Board. Any complaint should be submitted as soon as possible after the event takes place, preferably within ten business days.

2. The Board Chairperson may conduct an investigation to determine if the complaints have merit and/or if they can be disposed of administratively. Such disposition shall be final and there shall be no subsequent proceedings. If the complaints cannot be disposed of by mutual consent, the Board Chairperson may later serve in the same matter as the Student Conduct/Advisory Board or a member thereof. All complaints shall be presented to the accused student in w ritten form. A time shall be set for a hearing, not less than five and not to exceed fifteen calendar days after the student has been notified. Maximum time limits for scheduling of hearings may be extended at the discretion of the Board Chairperson.

3. Hearings shall be conducted by the Student Conduct/Advisory Board according to the following guidelines:

a.) Hearings shall be conducted in private. Admission of any person to the hearing shall be at the discretion of the Student Conduct/Advisory Board and/or its Board chairperson.

b.) In hearings involving more than one accused student, the Chairperson of the Student Conduct/Advisory Board may, at his or her discretion, permit the hearings concening each student to be conducted separately. The complainant and the accused have the right to be assisted by any advisor they choose, at their own expense. The advisor may be an attorney. The complainant and/or the accused are responsible for presenting his or her case and therefore, advisors are not permitted to speak or to participate directly in any hearing before the Student Conduct/Advisory Board.

c.) The complainant, the accused, and the Student Conduct Advisory Board shall have the privilege of presenting witnesses, subject to the right of cross-examination only by the Student Conduct/Advisory Board.

d.) The Student Conduct/Advisory Board, at the discretion of the Chairperson, may accept pertinent records, exhibits, and written statements as evidence for consideration. All procedural questions are subject to the final decision of the Chairperson of the Student Conduct/ Advisory Board.

e.) After the hearing, the Chairperson shall determine (by majority vote if the Student Conduct/Advisory Board consists of more than one person) whether the student has violated the section of the Student Code of Conduct which the student is charged with violating.

f.) The Chairperson's determination shall be made on the basis of whether it is more likely than not that the accused student violated the Student Code of Conduct.

g.) There shall be a single verbatim record, such as a tape recording, of all hearings before a Student Conduct/Advisory Board. The record shall be the property of the college.

h.) Failure to obey the summons of a Student Conduct/Advisory Board or college official may be found to be in violation of the Student Code of Conduct. In all cases, the evidence in support of the complaints shall be presented and considered.

B. Sanctions

1. The following sanctions may be imposed upon any student found to have violated the Student Code of Conduct:

a.) Warning — A notice in writing to the student that the student is violating or has violated the Student Code of Conduct and is to desist in the behavior.

c.) Probation — A written reprimand for violation of specifiedregulations. Probation is for a designated period of time and includes the probability of more severe disciplinary sanctions if the student is found to be violating any institutional regulation(s) during the probationary period.

c.) Loss of privileges — Denial of specified privileges for a designated period of time

d.) Fines — Previously established and published fines may be imposed

e.) Restitution —Compensation for loss, damage, or injury. This may take the form of appropriate service and/or monetary or material replacement.

f.) Discretionary sanctions— Work assignments, service to the college or other related discretionary assignments (such assignments must have the prior approval of the Board Chairperson.)

g.) College suspension — Separation of the student from the college. The student may apply for readmission at a future date. Time limit and provisions may apply.

h.) College expulsion — Permanent separation of the student from the college without the possibility of readmission

2. More than one of the sanctions listed above may be imposed for any single violation.

3. Other than college suspension and expulsion, the disciplinary sanctions shall not be made part of the student's permanent academic record, but shall become part of the student's confidential record. Upon graduation, the student's confidential record may be expunged of disciplinary actions other than college suspension, upon application to the Board Chairperson. Cases involving the imposition of sanctions shall remain a permanent part of the student record in the Student Services office.

4. The sanctions listed above may be imposed upon groups or organizations.

5. In each case in which a Student Conduct/Advisory Board determines that a student has violated the Student Code of Conduct, the sanction(s) shall be determined and imposed by the Board Chairperson. In cases in which persons other than or in addition to the Board Chairperson have been authorized to serve as the Student Conduct/Advisory Board, the recommendation of all members of the Student Conduct/Advisory Board shall be considered by the Board Chairperson in determining and imposing sanctions. The Board Chairperson is not limited to sanctions recommended by members of the Student Conduct/Advisory Board. Following the hearing, the Student Conduct/Advisory Board and the Board Chairperson shall advise the accused in writing of its determination and of the sanction(s) imposed, if any.

C. Interim Suspension

In certain circumstances, the Board Chairperson or a designee may impose a college suspension prior to the hearing before a Student Conduct/Advisory Board.

1. Interim suspension may be imposed only: a.) to ensure the safety and well-being of members of the college community, or preservation of college property; b) to ensure the student's own physical or emotional safety and well-being; or c) if the student poses a definite threat of disruption of or interference with normal operations of the college.

2. During the interim suspension, the student shall be denied access to the campus (including classes) and/or all other college activities or privileges for which the student might otherwise be eligible, as the Assistant Vice President or the Board Chairperson may determine to be appropriate.

D. Appeals

1. A decision reached by the Student Conduct/Advisory Board, or a sanction imposed by the Board Chairperson, may be appealed by the student(s) or complainant(s). Appeals must be made to an Appellate Board within five school days of the decision. Such appeals shall be in writing and shall be delivered to the Board chairperson or his/her designee.

Except as required to explain the basis of new evidence, an appeal shall be limited to the review of the verbatim record of the initial hearing and the supporting documents for one or more of the following purposes:

a.) To determine whether the original hearing was conducted fairly in light of the complaints and evidence presented, and in conformity with prescribed procedures giving the complaining party a reasonable opportunity to prepare and present evidence that the Student Code of Conduct was violated, and giving the accused student a reasonable opportunity to prepare and to present a rebuttal of those allegations.

b.) To determine whether the decision reached regarding the accused student was based on substantial evidence, that is, whether the facts in the case were sufficient to establish that a violation of the Student Code of Conduct occurred.

c.)To determine whether the sanction(s) imposed were appropriate for the violation of the Student Code of Conduct which the student was found to have committed

d.) To consider new evidence sufficient to alter a decision, or other relevant facts not brought out in the original hearing, because the person appealing did not know such evidence and/or facts at the time of the original hearing.

2. If the Appellate Board upholds an appeal, the matter shall be remanded to the original Student Conduct/Advisory Board and the Board Chairperson for re-opening of the hearing to allow reconsideration of the original determination and/or sanction(s).

3. In cases involving appeals by student complainants, the chief Student Affairs Officer may, upon review of the case, reduce or increase the sanctions imposed by the Board chairperson or remand the case to the original Student Conduct/Advisory Board and Board Chairperson.

SPRINGFIELD TECHNICAL COMMUNITY COLLEGE
STUDENT GRIEVANCE PROCEDURE

Before invoking the Student Grievance Procedure, a reasonable effort shall be made by those involved in a dispute to resolve it amicably. A dispute is most effectively handled and resolved by those closest to the problem, having the best understanding of the issues and having the ability to formulate a mutually acceptable resolution. Therefore, it is in the best interest of the student, the potential subject of a grievance, and the college to resolve disputes through open and cooperative dialogue. Only when such efforts are unsuccessful should the Student Grievance procedure be invoked. Throughout all phases of the Student Grievance Procedure, all reasonable efforts shall be made to maintain confidentiality in accordance with applicable law.

This process includes students with disabilities who feel they are denied appropriate accommodations under the Americans with Disabilities Act. However, students with disabilities who have complaints should consult the ADA Coordinator prior to filing a formal grievance.

1. *Definitions*

Complaint: The informal, unwritten stage of an allegation of mistreatment.

Grievance: A written complaint filed by a student with the person designated by the President as Student Grievance Officer specifically alleging discrimination or an abridgement of his/her rights as a student.

Student Grievance Officer: A college employee assigned responsibility for administering the student grievance procedure, including the maintenance of specified records. At STCC, the Assistant Vice President for Enrollment Management/Student Affairs has been assigned this responsibility. In case of grievance against the Assistant Vice President, the President shall designate another college official to act as the Student Grievance Officer.

Grievant: The student or students filing the grievance. The grievant must have been a registered student of the college at the time of the alleged mistreatment.

2. *Purpose*

The primary purpose of this procedure is to secure prompt and equitable resolution of student complaints and grievances. Grievances properly filed in this forum include, but are not limited to, matters arising under federal and state laws prohibiting discriminatory educational practices. Customary channels of communication shall be used wherever feasible, in seeking clarification of questions of concern before the grievance procedure is utilized. Every effort shall be made to maintain confidentiality at each level of this procedure.

3. *Time*

The number of days indicated at each level shall be considered as a maximum. Every effort shall be made to expedite the process. Nevertheless, the specified time limits may be extended in extenuating circumstances by the immediate supervisor of the person against whom the grievance is directed, the President or his/her designee, or by mutual consent of the grievant and the person against whom the grievance is directed, provided that such extensions shall be confirmed in writing.

4. *Procedure*

Level One — Informal Procedure

This is the informal stage where most complaints are resolved. The Grievant and the Responding Party should consult with the Student Grievance Officer at this time.

A student grievant initiates the informal phase of the grievance process. The Grievant shall first present his/her complaint orally and informally to the Responding Party. This shall be done in a reasonable period of time, not exceeding thirty (30) calendar days following the instructional period when the Grievant knew or should have known of the grievable act or inaction.

The Responding Party must respond to the Grievant's complaint within ten (10) days. Though this phase of the process is informal, the parties may present their positions in writing. If the matter is not resolved informally within ten (10) calendar days from the date a response to the complaint was due, the Grievant may proceed to Level Two.

Level Two: Formal Procedure

Prior to filing a written grievance at Level Two, a Grievant must consult with the Student Grievance Officer. The Responding Party should also consult with the Student Grievance Officer at this phase of the process.

L2 Step One — The Student Grievance Officer shall notify the parties in writing when a complaint is not resolved informally at Level One.

The Grievant may, within ten (10) calendar days after receipt of the Student Grievance Officer's written notice, file with the Student Grievance Officer a formal written grievance. The grievance shall contain the following information: the name and title of the person(s) against whom the grievance is directed, a statement of all known facts, documents and materials supporting the grievance, a list of individuals who have information pertinent to the grievance, and the relief sought by the Grievant. All supporting documents, if any, shall be attached to the grievance as part of the grievance. The grievance shall also state the date it is filed and that it is being filed at Level Two, Step One.

The grievance may be filed with the Student Grievance Officer by regular mail, certified mail, or in hand. Thereafter, the Student Grievance Officer shall deliver the grievance and all supporting documents, if any, to the Responding Party within five (5) calendar days. if the Responding Party is unavailable at the time the grievance is filed, the Student Grievance Officer shall use reasonable means to deliver the grievance within a reasonable period of time.

The Responding Party shall forward a written Level Two-Step One response to the Student Grievance Officer within ten (10) calendar days of his/her receipt of the grievance. The Student Grievance Officer shall deliver the written response to the grievance within five (5) calendar days of receipt.

L2 Step Two (Supervisor Level) — If the grievance is not resolved to the satisfaction of the Grievant within ten (10) calendar days after his/her receipt of the Step One response, or if no written response is submitted, the Grievant may within ten (10) calendar days after the written response was received or due, request the Student Grievance Officer to forward the written grievance and response, if any, to the supervisor of the Responding Party, with a copy to the Senior Officer of the work

area of the Responding Party.

The supervisor shall investigate the grievance and consult with the Senior Officer. The supervisor shall forward his/her written response to the Student Grievance Officer within ten (10) calendar days after receipt of the Step Two grievance. Thereafter, the Student Grievance Officer shall deliver the decision to the Grievant and the Responding Party within five (5) calendar days.

At any time before the issuance of the supervisor's Step Two decision, the Senior Officer may request that the parties meet to discuss the issue and attempt to resolve it.

Grade appeals do not go beyond this step (Level Two-Step Two) per the section on Grade Appeals.

Either party to a grievance may raise no new issues or allegations after Step Two.

L2 Step Three (Student Grievance Committee Level)

If the grievance is not resolved to the satisfaction of the Grievant within the period allowed at Level Two-Step Two, the Grievant may request a hearing before a Student Grievance Committee. Such a request must be in writing and presented to the Student Grievance Officer within ten (10) calendar days from the issuance of the supervisor's Level Two-Step Two decision.

Within ten (10) calendar days of the Student Grievance Officer's receipt of the Grievant's request for a hearing, the Student Grievance Officer shall arrange a hearing before a student grievance committee. The Student Grievance Officer shall use reasonable efforts to schedule the hearing at a time mutually convenient to the parties. At least twenty-four (24) hours prior to the hearing, the Student Grievance Officer shall provide each member of the committee and all parties to the grievance with copies of the grievance, responses to the grievance, decisions issued, and all relevant supporting documentation and materials. The committee's make-up and hearing rules are discussed later in this policy.

The Committee shall deliver its findings and recommendations to the Student Grievance Officer within ten (10) calendar days following the hearing. A copy of the Committee's findings and recommendations shall be delivered to the Grievant, the Responding Party, the President or his/her designee, within five (5) calendar days of receipt.

Within ten (10) calendar days of the President's receipt of the Committee's findings and recommendations, the President or his/her designee shall issue a written statement accepting, modifying, or rejecting the Committee's recommendations.

The decision of the President or his/her designee shall be final and binding on all parties.

Grade Appeals

Complaints or grievances filed in connection with assigned grades represent a special case within the grievance procedure. Grading reflects careful and deliberate assessment of a student's performance by the instructing professional(s). As such decisions are necessarily judgmental, the substance of those decisions may not be delegated to the grievance process. Nevertheless, the college recognizes that in rare cases the process of grading may be subject to error or injustice.

Except as otherwise provided by separate appeals procedures for clinical programs as approved by the President of the college, a student who alleges an error or

injustice in the grading process may file a grievance under the Student Grievance Procedure. A grade appeal grievance shall proceed no further than Level Two-Step Two. For purposes of a grade appeal, the senior academic officer of the college or his/her designee shall serve as the Student Grievance Officer throughout the grade appeal process.

If the faculty member who assigned the challenged grade is no longer employed by the college or is not available within the timelines specified (see Time definition), the student may initiate his/her Level One complaint with the chief administrator of the appropriate instructional division (who shall be identified by the senior academic officer.)

If at any level substantial evidence of error is produced, the grading process may be remanded to the instructor of record for reassessment. If the instructor of record is no longer available, the chief administrator of the appropriate instructional division or his/her designee shall instead reassess the grading process.

Membership of the Student Grievance Committee

The composition of the college's Student Grievance Committee shall consist of five members: one student, one unit professional, one faculty member, one non-unit professional, and one unit classified employee. The President or his/her designee shall appoint each member from among the recommendations submitted by the Student Grievance Officer.

Service on a committee shall be voluntary, provided that a member who has a personal interest in the particular grievance shall be ineligible to serve on a Grievance Committee. All college employees serving on a Student Grievance Committee and acting within the scope of their official duties on the committee shall be covered to the full extent provided under Massachusetts General Laws, Chapter 258, including the indemnification provision contained in MGL, Chapter 258, Section 9.

All Student Grievance Committee members as well as all others in attendance at a student grievance proceeding, shall maintain the confidentiality of the proceedings. The Student Grievance Officer shall attend all committee hearings but shall not vote.

Guidelines for Committee Hearings

The following guidelines provide the framework for conducting a Student Grievance Committee hearing.

1) Prior to the hearing, the newly-impaneled committee shall meet to elect a committee chairperson. The chairperson shall be selected by a simple majority vote.

2) The chairperson of the committee shall be responsible for conducting the hearing and drafting the decision of the committee, but shall vote only in the event of a tie.

3) All hearings shall be closed, and deliberations of the committee shall be confidential and conducted in private.

4) The Grievant and the Responding Party shall be in attendance at the hearing. Each party may be accompanied by an advisor at the hearing. The advisor, however, may not participate in the hearing or question witnesses. Either party may at any time during a hearing consult in private with his/her advisor.

5) Witnesses may be asked by the committee to remain outside of the hearing room until they are called to testify.

6) The Grievant will address the committee first. The Grievant will state the nature of his/her grievance and may present relevant evidence and/or witnesses in support of the grievance.

7) The Responding Party may respond to the Grievant's complaint and present relevant evidence and/or witnesses in opposition to the grievance.

8) Once the parties have presented their respective positions, the committee may question the parties and/or witnesses.

9) After the committee has questioned the parties, each party will be given the opportunity to question the other party and their respective witnesses. All questions must be directed through the committee. If the committee determines that a question is relevant, the party or witness to whom it is addressed will be asked to respond.

10) Following the parties' questioning of each other, the committee will have another opportunity to question the parties and witnesses.

11) Hearings before the committee shall not be subject to the formal rules of evidence. In all cases the hearing shall be conducted in a fair and impartial manner.

12) If a party to a grievance fails to appear for a scheduled hearing, the committee has the discretion to proceed with the hearing and issue its findings and recommendations in the party's absence.

13) The decision of the committee shall be based on the relevant evidence presented at the hearing. The decision shall be in writing and shall include: a list of all documentary evidence and witnesses presented; a summary of the testimony offered by both parties and their respective witnesses; the findings of the committee and its recommendations. Copies of the decision and recommendations of the Student Grievance Committee shall be forwarded by the Student Grievance Officer to the Grievant, the Responding Party and the President or his/her designee.

14) When deciding upon a grievance, the committee shall consider whether a finding against the Responding Party is fundamentally fair and reasonable under the circumstances and in accordance with applicable college rules and procedures.

Withdrawal

A student may withdraw his or her complaint or grievance at any time. Withdrawal must be accomplished in writing or by oral agreement confirmed in writing.

Reprisals

No member of the college community shall retaliate or threaten to retaliate against, interfere with, restrain, or coerce any student in the exercise of his/her rights under the Student Grievance Procedure or his/her participation in any grievance proceedings.

Collateral Rights of Person Grieved by Student

If the recommendations made at any level of the grievance procedure result in sanctions against a college employee, the sanctions shall be regarded as administrative actions subject to all conditions of applicable collective bargaining agreements and college or Board of Higher Education personnel policies.

Alternative Forums

Filing a grievance in accordance with the Student Grievance Procedure in no way abrogates a student's right to file a complaint with an appropriate state or federal agency or in any other forum.

POLICY OF CONFIDENTIALITY OF STUDENT RECORDS

Educational Records

The Family Educational Rights and Privacy Act (FERPA) of 1974 affords students certain rights with respect to their academic records. In compliance with the law, STCC has established the following policy.

1. Students have a right to inspect and review their academic records. No information is released over the telephone by the Registrar's Office.
2. Students have the right to request the amendment of their academic records to ensure they are not inaccurate, incomplete, misleading, or otherwise in violation of their privacy.
3. Only college personnel who have a "legitimate educational interest" have limited access to students' academic records for a) internal educational purposes, b) routine administrative and statistical purposes, c) instructing and advising a student in an academic area, and d) campus security officers in case of an emergency.
4. "Confidential Data" includes students' grades, class schedules, and all other non-directory information contained in a student's record. Confidential student data may only be utilized for official college business and made available to members of the college community who have a "legitimate educational interest" or a "need to know" by those officials of an institution who act in the student's educational interest. These individuals include faculty, administration, clerical and professional employees, and other persons who need student record information for the effective functioning of their office or position.
5. Students have a right to file a complaint with the U.S. Department of Education concerning alleged failures of the college to comply with FERPA.
6. Directory Information will include:

   a) name

   b) address

   c) confirmation of date of graduation and certificate/degree received

   d) dates of attendance

   e) academic designations and awards received, e.g., Dean's List

   Students may withhold Directory Information by contacting the Registrar's Office in writing. Requests for nondisclosure must be re-filed in the Registrar's Office on an annual basis. It is the student's responsibility to do so.
7. No record of access will be kept if the obtained information is considered directory information, is required for normal clerical maintenance of a file, or is seen by college personnel in the normal performance of their responsibilities.
8. Students have a right to a copy of their academic transcript. There is a 48-hour waiting period to obtain the transcript and the cost is $3.00 per request.

A written release from the student is required, along with a photo ID. A request for a transcript may be denied due to a financial obligation to the college. The college will disclose a student's academic transcript to a third party if we have a signed and dated note from the student requesting us to do so. Students will be notified by mail whenever a court subpoena is issued regarding their academic records.

9. The college will not disclose any information from a student's academic records to the parents of a dependent student.

Counseling Records

Counseling records are distinctly different from educational records, and access is limited. As mandated by state and federal law and by the ethics of the counseling profession, information shared by a student in counseling is strictly confidential and will not be disclosed without a student's prior written consent. Knowing that what they share will not be disclosed without their permission, students can safely discuss their concerns in a highly supportive environment.

When appropriate, counselors encourage students to share information with the faculty, or sign a release form allowing the counselor to share information, related to any disability or medical problem which might have an impact on the learning process. Counselors work with both students and faculty members in providing adaptive equipment and other learning support services.

Exceptions to the rule of confidentiality do exist, however, in which a counselor would share information with appropriate individuals or agencies without a student's permission. These exceptions include:

professional consultation	legal cases related to:
child or elder abuse /neglect	child custody
threatening to harm yourself	hospitalization
threatening to cause physical violence to another	court-ordered evaluation
information related to the planned commission of a crime	

Please feel free to discuss confidentiality with your counselor. More extensive written materials related to confidentiality are available upon request in the Counseling Center.

Medical Records

Medical records, such as treatment or immunization, are distinctly different from educational records and are considered strictly confidential; they may not be disclosed by the Health Services department without a student's prior written consent. While students are generally encouraged to make faculty aware of any medical problem which might significantly affect the learning process, their right to keep this information confidential is protected by state and federal law. The Health Services department maintains student immunization records for a minimum of five years. Record release forms may be obtained at the Health Services office.

CORI (Criminal Offender Record Information)

Students accepted into any program or offering of the School of Health must undergo a Criminal Offender Record Information (CORI) and a Sex Offender Registy Information (SORI) check once a year. This policy also applies to students participating in laboratory experiences on and off campus, including field trips and site visits. Depending on the student's CORI and SORI report, participation in a program or clinical affiliation, laboratory or practicum experience may be denied. Any student who refuses to consent to a CORI and SORI check will be precluded from participating in the corresponding fieldwork, practicum course, and/or laboaratory experience. Students who do not complete the required clinical, laboratory, or practicum courses will be unable to fulfill requirements for graduation and may be withdrawn from the program. Alternative clinical, laboratory, and/or practicum experiences on, or off campus, are not an option. For additional information, contact the Dean of Health's Office.

CORI and SORI checks are performed pursuant to Massachusetts General Law, Chapter 6, Sections 167-178B, and consistent with guidelines promulgated by the Commonwealth of Massachusetts Department of Public Health and Massachusetts General Law, Chapter 6, Sections 178C-178P.

Please note that a CORI/SORI request form must be on file at the college before the student can register for classes.

School of Continuing Education

Through the School of Continuing Education (afternoon, evening, weekend, online, and summer courses), the College meets a wide variety of community educational and training needs. Programs of study are offered on a year-round basis with the fall and spring semester dates closely paralleling those of the Day Division. All courses offered during the summer, whether during day or evening hours, are operated by the School of Continuing Education.

A large selection of distance education courses, plus an entire associate degree program in General Studies are offered online for convenient any-time, any-place access to college education.

The School of Continuing Education is designed to meet the needs of the community for higher education, while operating on a self-sustaining basis in accordance with the General Laws of the Commonwealth. The School of Continuing Education provides:

1. Credit courses in both general and specialized educational fields;
2. The opportunity to earn an associate degree or certificate in a wide range of programs on a part-time basis;
3. Access to college courses at an extension center in Palmer for students who may not have convenient access to the Springfield campus.
4. Access to Internet courses that offer the flexibility of participating each week in a class when it is convenient for the student.

Offerings are also designed to furnish opportunities to: (1) resident students of Springfield Technical Community College to supplement their work in the day division of the College by taking additional elective courses; (2) students of other colleges and universities to take courses for credit, transferable to their resident college; (3) high school students who wish to remove academic deficiencies before entering college in September; and (4) regional adult students who wish to update career skills, pursue a new career, or gain experience in a subject of specialized interest.

Credit courses in the following degree or certificate programs are offered by the School of Continuing Education. Certificate of Achievement programs are short-term, 24 credits or less, courses of study. Some individual courses are available only through the School of Continuing Education.

Core courses for the Fire Protection and Safety Technology program are offered only during the evening.

Associate Degree Programs

Business Administration
- Accounting
- General Business
- General Business/Transfer Compact Option
- Management
- Materials Management Option

Computer Information Technologies

- Computer and IT Security
- Programmer Option
- Microcomputer Specialist Option

Electrical Engineering Technology
Energy Systems Technology
Fire Protection and Safety Technology
General Studies
- University Without Walls Option

Graphic Arts Technology
- Commercial Art Option

Law Enforcement/Criminal Justice
Mechanical Engineering Technology

Certificate of Completion Programs

Architectural Technology
Computer-Aided Drafting
Computer-Aided Manufacturing
Desktop Publishing
Electrical/Robotics Technology
Fire Science
Heating/Ventilation/Air Conditioning
Medical Coding and Billing Specialist
Microcomputer Specialist
Programmer
Web Programming

Certificate of Achievement Programs

Cisco Networking
Materials Management (APICS)
Website Basics

Training Program

Journeyman Electrician

Center for Business and Technology

The Center for Business and Technology (CBT) provides a wide range of workforce development services and career training programs for companies and individuals in the region, including:

- Computer training and IT certification
- Management development
- Allied health
- Entrepreneurship education
- Real estate sales and appraisal
- Technology and trades
- Test preparation
- English as a Second Language
- Basic workplace skills
- Certification testing
- Over 3,500 web-based courses

Regardless of company size, the Center for Business and Technology's professional staff will work with company representatives to design a relevant and cost-effective training program for employees. The CBT is pleased to have provided a diverse range of training programs for employees of many companies throughout the Pioneer Valley.

Curricula of the College

ARTS, HUMANITIES, AND SOCIAL SCIENCES
- Law Enforcement

BUSINESS AND INFORMATION TECHNOLOGIES
- Business Administration
  - Accounting
  - Finance
  - General Business
    - Option: Transfer Compact
    - Option: Entrepreneurship
  - Management
  - Marketing
- Information Technologies
  - Computer Information Technologies
    - Option: Computer and IT Security
    - Option: Microcomputer Specialist
    - Option: Programmer
    - Option: Web Programming
  - Health Information Technologies
    - Option: Medical Coding and Billing Specialist
  - Office Information Technologies
    - Clerical Office Assistant *
    - Option: Office Administration - Executive
    - Option: Medical Office Information Technology
    - Option: Computer Software Applications Spec.

ENGINEERING TECHNOLOGIES
- Automotive Technology
- Civil Engineering Technology
  - Option: Architectural Technology Transfer
  - Option: Construction Management
- Computer Systems Engineering Technology
- Digital Media Production
  - Option: Teleproduction Technology
  - Option: Multimedia Technology
- Electrical Engineering Technology
- Electronic Systems Engineering Technology
- Energy Systems Technology
- Fire Protection and Safety Technology *(evening only)*
- Graphic Arts Technology
  - Option: Commercial Art
  - Option: Digital Photography
- Landscape Design and Management Technology
  - Option: Transfer Compact
- Laser Electro-Optics Technology

Mechanical Engineering Technology
Telecommunications Technology

HEALTH

Clinical Laboratory Science
Cosmetology *
Dental Assistant *
Dental Hygiene
Diagnostic Medical Imaging
    Nuclear Medicine
    Radiography
    Sonography
Integrative Health Care
    Massage Therapy
Medical Assistant
Nursing
Rehabilitation Therapies
    Occupational Therapy Assistant
    Physical Therapist Assistant
Respiratory Care
Surgical Technology

LIBERAL ARTS TRANSFER AND GENERAL STUDIES

Liberal Arts/General Studies
    Option: Commonwealth Transfer Compact
    Option: University Without Walls
Liberal Arts Transfer
    Option: Liberal Arts Transfer
    Option: Fine Arts
    Option: Teacher Education Transfer

MATH, SCIENCES, AND ENGINEERING TRANSFER

Biotechnology
Engineering and Science Transfer
    Option: Engineering Transfer
    Option: Computer Science Transfer
    Option: Mathematics
    Option: Physics
    Option: Science Transfer
        Biology
        Chemistry
        Pre-Medical/Pre-Dental/Pre-Veterinary
    Option: Technical Engineering

*Certificate Program

Arts, Humanities, and Social Sciences

Students, faculty and staff, and community residents including the Freedom Choir and local civil rights activists, attended STCC's commemoration of the 50th anniversary of Rosa Parks' arrest for defying southern Jim Crow laws. The event was organized by the STCC departments of history and social sciences.

The primary mission of the School of Arts, Humanities, and Social Sciences is to provide educational opportunities in support of the degree programs at STCC. These opportunities include studies in what is generally referred to as the "liberal arts," and they constitute the majority of requirements for the student's general education. With the exception of the Law Enforcement/Criminal Justice program, and the Early Childhood Education program which is offered during the evening, this school does not offer programs or degree options. Yet, every student in the college takes courses through the school to fulfill the general education portion of their degree requirements. Thus, the School of Art, Humanities, and Social Sciences plays a pivotal role in the academic and intellectual development of all STCC students, whether they are pursuing a program toward a specific career path or preparing to transfer to a baccalaureate program.

As its title suggests, the scope of the school is broad. Within this breadth, students will find a wealth of possibilities for enrichment and a variety of subjects to explore. Under the banner of arts, course offerings include visual art and art history, theater history and drama, music appreciation and applied music courses. Courses in the humanities include English as a Second Language, remedial reading and writing, English composition and literature, multiple options in writing courses (from business to technical to creative writing), foreign languages, and philosophy. The Department of Social Sciences provides a wide array of offerings including courses in anthropology, sociology, history, psychology, political science, and economics, education, and law enforcement.

Through coursework in the School of Arts, Humanities, and Social Sciences, students are encouraged and challenged to investigate some of the enduring issues surrounding society and culture. It is by way of the "liberal arts" component of the curriculum that students learn to understand the context of their time and lives by studying other times and other lives. It is through the "liberal arts" that students develop critical thinking skills, and most importantly, where students learn to organize their thinking and to communicate effectively with others.

The School of Arts, Humanities, and Social Sciences is a co-sponsor, with the Office of Academic Affairs, and the Chicopee Savings Bank Endowment for Academic Excellence, of several special educational programs and cultural activities on the campus.

The Honors Certificate program provides for the needs of the highly motivated student by offering academic coursework and resources which challenge the student beyond the expectations of standard courses and degree requirements.

Each academic year the Ovations program brings locally and nationally acclaimed scholars, writers, artists, political figures and other professionals to the campus under the auspices of its lecture program. Ovations lectures and events are free and open to the entire STCC campus and Greater Springfield communities.

STCC Gallery Players offer theater productions once each semester in the campus theater. These events provide the opportunity for students to work alongside and participate with professional directors, actors, set designers, and technicians in experiencing all aspects of theatrical production. Gallery Players productions are open to the public for a modest fee.

The Amy H. Carberry Fine Arts Gallery at STCC provides a campus showcase for the exhibition of original works of art. These exhibitions attempt to showcase art by Connecticut Valley artists, and often include the works of professional artists, faculty and students of the college. The Fine Arts Gallery operates during the academic year, and enhances the cultural climate on the campus.

Law Enforcement/Criminal Justice

Associate Degree Program LECJ.AS

A criminal justice program is offered primarily for students desiring to pursue a career in Law Enforcement. In addition, students desiring a pre-law school course of study will find the Law Enforcement Program most advantageous as the case method of study is employed wherever possible. There is opportunity for in-service police officers who are desirous of improving their knowledge and abilities through study of specific police science courses and various general education subjects.

The objective of this two-year program is to familiarize the student with legal, technical and practical aspects of law enforcement procedures. The ever-increasing crime rate, changing social order, changes in the criminal laws and major court decisions are all factors that have made the law enforcement officer's role one of extreme importance and ever-increasing complexity in modern society. Toward this end, the student will be provided with a strong background in the basic administration of justice as well as a general knowledge of the constitutional safe-guards as afforded in the Bill of Rights. This program also includes study in the social science area and a general choice of electives. This program was the first two-year program in Western Mass. to be approved for state promotional funding of police who conplete quality criminal justice programs.

Upon the successful completion of requirements for this program, as listed below, the degree of **Associate in Science in Law Enforcement** will be awarded.

SEMESTER 1

No.	Course Title	Class	Lab	Credits
ENGL-100	English Composition 1	3		3
SOCL-100	Intro. to Sociology	3		3
LECJ-100	Criminal Procedures 1	3		3
LECJ-110	Intro. to Crim. Justice	3		3
	Elective	3		3
		15		15

SEMESTER 2

ENGL-200	Comp. 2: Intro. to Lit.	3		3
SOCL-200	Social Problems	3		3
LECJ-200	Criminal Procedures 2	3		3
LECJ-230	Criminal Evidence	3		3
	Elective	3		3
		15		15

SEMESTER 3

PSYC-100	General Psychology	3		3
PSCI-100	Amer. Government and Politics *	3		3
LECJ-300	Criminal Law 1	3		3
LECJ-340	Criminal Investigation	3		3
	Elective	3		3
		15		15

SEMESTER 4

WRIT-202	Technical Report Writing	3	3
PSYC-400	Prin. of Normal/Abnormal Behavior	3	3
LECJ-400	Criminal Law 2	3	3
LECJ-450	Law Enforcement Mgmt. and Planning	3	3
	Elective	3	3
		15	15

*HIST-110 or HIST-210 may be substituted.

LAW ENFORCEMENT **LECJ.COC**

Certificate of Completion program

Developed in cooperation with the Massachusetts Chiefs of Police Association, the Law Enforcement Certificate program prepares students for a career in law enforcement. The certificate combines specialized criminal justice and general education coursework to provide students with the knowledge and skills they need to compete for entry in the Massachusetts law enforcement field. All of the credits earned in this certificate program can be applied to a Quinn Bill-eligible associate in science degree in criminal justice.

No.	Course Title	Class	Lab	Credits
ENGL-100	English Composition 1	3		3
LECJ-110	Introduction to Criminal Justice	3		3
LECJ-120	Criminology	3		3
LECJ-230	Criminal Evidence	3		3
LECJ-240	Interpersonal Communications in Criminal Justice	3		3
LECJ-300	Criminal Law 1	3		3
LECJ-450	Law Enforcement Management and Planning	3		3
PSYC-100	General Psychology	3		3
SOCL-100	Introduction to Sociology	3		3
		27		27

Upon successful completion of the requirements for this program, a **Certificate of Completion in Law Enforcement** from STCC will be awarded.

Business and Information Technologies

Students in one of the new computer labs in used for Computer Information Technologies, Health Information Technologies, Office Information Technologies, and Business.

Business Administration BUSA

The Business Administration department offers a variety of programs to satisfy the needs of its students, who may plan to transfer to a four-year college or university to complete the baccalaureate degree or may wish to enter the field of business directly from STCC. The main objective of the Department is to enable the student to develop those skills and proficiencies that are essential to the competent performance of professional work either in the classroom or on the job.

There is a comprehensive range of elective courses available in each of the degree programs, allowing the student and faculty advisor to structure a program consistent with specific interests and goals.

BUSINESS ADMINISTRATION

Associate in Science degree programs

- Accounting
- Finance
- Management
- Marketing
- General Business
- General Business/Transfer Compact Option
- General Business/Entrepreneurship Option

The Accounting, Finance, Management, Marketing and General Business degrees or options require a minimum of 21 credits of liberal arts, math and science courses and the remaining 41 credits in business and general course electives. These programs are designed to meet career objectives or transfer goals to four-year colleges. The General Business/Transfer Compact Option requires a minimum of 38 credits of liberal arts, math and sciences courses and the remaining 26 credits in business and general course electives. This program is designed to meet transfer requirements to four-year *public* colleges, or universities that are members of the Commonwealth Transfer Pact, or those colleges that are accredited by the AACSB (American Assembly of Collegiate Schools of Business).

All candidates for graduation must complete a minimum of 62 to 64 credit hours of course work, as well as maintain a minimum grade point average of 2.0.

Transfer students are required to complete a minimum of 15 credit hours of Business Department courses at Springfield Technical Community College.

Challenge and CLEP exams covering a number of career and general courses are available at STCC.

CORE CURRICULUM:

The Department of Business Administration provides a common curriculum in the freshman year for most Associate Degree programs, exposing students to a variety of introductory business courses before they choose a degree and a major. Before a student can be completely scheduled, the College requires math and English placement tests. Depending on the results, students will be assigned one of the following English and math courses:

English

DRDG-091	Reading Level 1
DRDG-092	Reading Level 2
DWRT-099	Review for College Writing
ENGL-100	English Composition 1

Math

ARTH-071	Basic Math
ALGB-081	Elements of Algebra 1
ALGB-091	Elements of Algebra 2
MATH-122	Applied Math 1
BSTS-143	Business Statistics 1
MATH-157	Calculus for Business, Life and Social Sciences 1

Of these three English courses, only ENGL-100, English Composition 1, is accepted toward graduation. Of the six math courses, only MATH-122, Applied Math or MATH-157, Calculus for Business, Life and Social Sciences 1 for transfer students, or BSTS-143 Business Statistics for career students, are accepted toward graduation. While students might be placed in other math or English courses, and hence be required to complete them, these courses are considered developmental, and will not count toward graduation. Students who have been out of school for a number of years, or are weak in math and/or English, should review these skills before taking the placement tests. In this way, students will have the best chance of placing into an acceptable level of English and math. Students must place into DRDG-092 (reading) or higher and ALGB-081 or ALGB-087 (math) or higher, or be exempt, to be permitted to enroll in **any** business course. Enrollment in DWRT-099 does not change this requirement.

FRESHMAN YEAR

Common Core Requirements for most Business Administration programs.

SEMESTER 1

No.	Course Title	Class	Lab	Credits
ENGL-100	English Composition 1	3		3
BSTS-143	Business Statistics 1 *(or)*			
MATH-122	Applied Math 1 *(or)*			
MATH-157	Calculus for Business, Life and Social Sciences 1 *(or)*			
STAT-142	Statistics (Note 1)	3		3
ACCT-110	Accounting1	5		4
MANG-110	Principles of Management	3		3
CMPA-103	Microcomputer Applications for Windows *(or)*			
CMPA-101	Intro. to Word Processing *(and)*	1		1
CMPA-105	Intro. to Excel *(and)*	1		1
CMPA-110	Intro. to Access	1		1
		17		16

SEMESTER 2

ENGL-200	Comp. 2: Intro. to Lit.	3	3
	Math or Humanities or Social Science Elective (Note 1 and 2)	3	3
ACCT-210	Accounting 2	5	4
FINC-110	Intro. to Finance	3	3
MRKT-110	Principles of Marketing	3	3
		17	16

NOTES:

(1) Transfer students are advised to take MATH-122 Applied Math 1 or MATH-157 Calculus for Business, Life, and Social Sciences 1 or STAT-142 Statistics in Semester 1 and MATH-222 Applied Math 2, MATH-157 Calculus for Business, Life, and Social Sciences 1, or STAT-142 Statistics in Semester 2. Career students should take BSTS-143 Business Statistics 1 in Semester 1, a second math or a humanities or social science elective in Semester 2.

(2) Humanities electives include art, college theater, foreign languages, music, speech, philosophy, and literature. Social science electives include history, political science, sociology, psychology, and economics.

Business Administration — Associate in Science Degree

The information that follows illustrates the course sequence for the second year of study

ACCOUNTING **ACCT.AS**

The demand for trained accountants has increased substantially with the growth and complexity of business and government. The modern accountant must have an appreciation of all aspects of business organizations as well as technical proficiency in the following accounting matters: maintaining accurate records, preparing and analyzing financial statements. This curriculum has been designed to help prepare the student to be that modern accountant. Manpower projections have typically shown that accountants are among those who are in high demand and well paid.

Senior Year Courses

SEMESTER 3

No.	Course Title	Class	Lab	Credits
ACCT-310	Intermediate Accounting 1	4		3
ACCT-313	Federal Income Tax *(or)*			
FINC-411	Managerial Finance	3		3
BLAW-310	Business Law 1	3		3
ECON-100	Economics 1	3		3
SOCL-100	Intro. to Sociology (or)			
PSYC-100	General Psychology	3		3
		16		15

SEMESTER 4

ACCT-311	Cost Accounting	4	4
ACCT-316	Computerized Accounting	3	3
ACCT-410	Intermediate Accounting 2	4	3
BLAW-410	Business Law 2	3	3
ECON-200	Economics 2	3	3
		16	15

Upon the successful completion of the requirements for this program, as listed above, the degree of **Associate in Science in Business Administration-Accounting** will be awarded.

FINANCE — FINC.AS

A study of the field of finance exposes the student to the sources and uses of money. Topics within courses include the raising of new capital, the efficient use of available funds, investing, money and banking, the Federal Reserve System and other basic studies related to the monetary system. Emphasis is given to analysis of financial statements as well as fiscal planning and management.

Senior Year Courses

SEMESTER 3

No.	Course Title	Class	Lab	Credits
ACCT-312	Managerial Accounting	3	1	3
BLAW-310	Business Law 1	3		3
FINC-411	Managerial Finance	3		3
CMPA-115	Introduction to the Internet *(or)*			
CMPA-120	Introduction to PowerPoint *(or)*			
CMPA-125	Introduction to Integration	1		1
ECON-100	Economics 1	3		3
SOCL-100	Intro. to Sociology *(or)*			
PSYC-100	General Psychology	3		3
		16	1	16

SEMESTER 4

FINC-310	Money and Banking	3	3
FINC-410	Investments	3	3
BLAW-410	Business Law 2	3	3
ECON-200	Economics 2	3	3
	Elective: General	3	3
		15	15

Upon the successful completion of requirements for this program, as listed above, the degree of **Associate in Science in Business Administration-Finance** will be awarded.

MANAGEMENT **MANG.AS**

The management program at STCC is designed to give the student a comprehensive background in the area of management. The curriculum is student-oriented primarily because its content respects the student's need for a challenging, thorough examination of the field of management, and because it provides a sound foundation for further study. In addition, specialized courses such as human resource management, organizational behavior, labor relations, production, and operation research provide the student with the necessary knowledge to make positive contributions to any commercial or non-commercial organization.

Senior Year Courses

SEMESTER 3

No.	Course Title	Class	Lab	Credits
MANG-310	Human Resource Management	3		3
ACCT-312	Managerial Accounting	3	1	3
BLAW-310	Business Law 1	3		3
CMPA-115	Introduction to the Internet *(or)*			
CMPA-120	Introduction to PowerPoint *(or)*			
CMPA-125	Introduction to Integration	1		1
ECON-100	Economics 1	3		3
SOCL-100	Intro. to Sociology (or)			
PSYC-100	General Psychology	3		3
		16	1	16

SEMESTER 4

MANG-427	Organizational Behavior	3		3
MANG- 410	Labor Relations *(or)*			
MANG-411	Production Management	3		3
ECON-200	Economics 2	3		3
BLAW-410	Business Law 2	3		3
	Elective: General	3		3
		15		15

Upon the successful completion of requirements for this program, as listed above, the degree of **Associate in Science in Business Administration-Management** will be awarded.

MARKETING **MRKT.AS**

In recent years, marketing has become an increasingly important activity within our society and, in particular, in New England where there is a growing emphasis on the providing of services. Marketing is a broad field which includes defining and creating a market for a product, gauging and meeting customer wants and needs, advertising, sales, retailing, fashion and merchandising and related areas. Essentially, the study of marketing relates to the performance of business activities that direct the flow of goods and services from producers to consumers.

Senior Year Courses

SEMESTER 3

No.	Course Title	Class	Lab	Credits
MRKT-310	Retailing	3		3
MRKT-410	Consumer Behavior	3		3
BLAW-310	Business Law 1	3		3
ECON-100	Economics 1	3		3
SOCL-100	Intro. to Sociology *(or)*			
PSYC-100	General Psychology	3		3
		15		15

SEMESTER 4

MRKT-311	Advertising and Promotion	3		3
MRKT-333	Marketing for the Internet	3		3
MRKT-41	Sales & Sales Management	3		3
BLAW-410	Business Law 2	3		3
ECON-200	Economics 2	3		3
		15		15

Upon the successful completion of requirements for this program, as listed above, the degree of **Associate in Science in Business Administration-Marketing** will be awarded.

GENERAL BUSINESS — BUSN.AS

The General Business program allows students maximum flexibility in choosing Business Department electives covering the Accounting, Finance, Management and Marketing areas. The students receive a general overview and broad background in business subjects. This program may be preferred by those unable to decide on a major after completing the freshman core business program (described previously) or by those contemplating transfer to a four-year college who want the flexibility of choosing business electives for a particular institution.

Senior Year Courses

SEMESTER 3

No.	Course Title	Class	Lab	Credits
	Business Dept. Elective (Note 1)	3		3
	Business Dept. Elective (Note 1)	3		3
BLAW-310	Business Law 1	3		3
CMPA-115	Introduction to the Internet *(or)*			
CMPA-120	Introduction to PowerPoint *(or)*			
CMPA-125	Introduction to Integration	1		1
ECON-100	Economics 1	3		3
SOCL-100	Intro. to Sociology (or)			
PSYC-100	General Psychology	3		3
		16		16

SEMESTER 4

	Business Dept. Elective (Note 1)	3	3
	Business Dept. Elective (Note 1)	3	3
BLAW-410	Business Law 2	3	3
ECON-200	Economics 2	3	3
	Elective: General	3	3
		15	15

NOTE:

(1) Most 300 or 400 level Business Administration Department courses

Upon the successful completion of requirements for this program, as listed above, the degree of **Associate in Science in Business Administration** will be awarded.

GENERAL BUSINESS/TRANSFER COMPACT OPTION* **BTCM.AS**

While any of the previously mentioned programs could be used for transfer, the General Business/Transfer Compact program has been designed to meet the transfer requirements of four-year public colleges or universities that are members of the Commonwealth Transfer Compact, or those colleges that are accredited by the AACSB (American Assembly of Collegiate Schools of Business).

This program may be preferred by those wishing a greater mix of liberal arts, math and science courses. A total of 38 credits of such courses are required as compared to 21 to 24 credits in the other six (6) programs mentioned previously. In addition, if you wish to transfer to a *public state college or university* that requires its incoming juniors to meet the transfer compact, then you should consider following this program.

*Please note that this program is a specially designed transfer program and not meant for all transfer students. You should consult with your advisor or the college's transfer counselor to decide which of the programs would best meet your transfer needs.

Senior Year Courses

SEMESTER 3

No.	Course Title	Class	Lab	Credits
ECON-100	Economics 1	3		3
SOCL-100	Intro. to Sociology *(or)*			
PSYC-100	General Psychology	3		3
	Elective: Laboratory Science	3	2	4
	Humanities Elective (Note 1)	3		3
	Business Dept. Elective (Note 2)	3		3
		15	2	16

SEMESTER 4

ECON-200	Economics 2	3		3
	Humanities Elective (Note 1)	3		3
	Humanities Elective (Note 1)	3		3
	Business Dept. Elective (Note 2)	3		3
	Elective: Laboratory Science	3	2	4
		15	2	16

NOTE:

(1) Humanities electives must be selected from art, college theater, foreign languages, music, philosophy and literature.

(2) Any 300 or 400 level Business Administration Department course.

Please note: The appropriate mathematics, humanities, science, and business electives depend upon the college to which you are planning to transfer. All course choices should be discussed with the College's transfer counselor or your advisor.

Upon successful completion of requirements for this program, as listed above, the degree of **Associate in Science in Business Administration** will be awarded.

ENTREPRENEURSHIP OPTION **ENTP.AS**

Starting a new small business? Presently working for a small business with an eye on a management position? Our entrepreneurship option will be of interest to you. Whether students complete the entire program requirement leading to degree status or simply take selected courses to satisfy an immediate need, the program gives students an awareness of the unique demands placed upon today's small businesses and their owners.

Note: Some of the core (semester 1 and 2) courses in this option differ from those of the other majors within the Business Administration department. Also, Entrepreneurship courses are usually offered only once a year in the semester indicated (semesters 1 & 3 are fall, 2 & 4 are spring). Many courses have prerequisites which students should examine within this catalog.

SEMESTER 1

No.	Course Title	Class	Lab	Credits
CMPA-103	Microcomputer Applications for Windows *(or)*	3		3
CMPA-101	Introduction to Word Processing *(and)*			
CMPA-105	Introduction to Excel *(and)*			
CMPA-110	Introduction to Access			
SMBE-116	Intro. to Small Business Management	3		3
SMBE-125	Intro. to Entrepreneurship	3		3
ENGL-100	English Composition 1	3		3
MATH-122	Applied Mathematics 1 *(or)*			
BSTS-143	Business Statistics *(or)*			
MATH-157	Calculus for Business, Life and Social Sciences 1 *(or)*			
STAT-142	Statistics	3		3
		15		15

SEMESTER 2

ACCT-110	Accounting 1	5		4
FINC-110	Introduction to Finance	3		3
SMBE-112	Small Business Marketing	3		3
ENGL-201	Business English	3		3
	Elective: Math/Humanities/Soc.Sci. (Note 1)	3		3
		17		16

SEMESTER 3			
ACCT-316	Computerized Accounting	3	3
BLAW-312	Legal Environment of Business	3	3
BUSN-330	Supervisory Management *(or)*		
MANG-335	Leadership	3	3
ECON-100	Principles of Economics 1	3	3
	Elective: Departmental (Note 2)	3	3
		15	15
SEMESTER 4			
SMBE-440	Entrepreneurial Field Studies	3	3
SMBE-343	Small Business Seminar	3	3
ECON-200	Principles of Economics 2	3	3
SOCL-100	Introduction to Sociology *(or)*		
PSYC-100	General Psychology	3	3
	Elective: General	3	3
		15	15

Note 1: Students are urged to increase their math skills by taking a second math course to fulfill this requirement (i.e., STAT-142, MATH-222, MATH-157). A humanities course (art, theater, foreign language, music, literature, or philosophy) or social science course (history, economics, psychology, political science, or sociology) will also fulfill this requirement.

Note 2: Most upper level Business Department courses (level 300 and 400 series) will satisfy this requirement.

Upon successful completion of requirements for this program as listed above, the degree of **Associate in Science in Business Administration** will be awarded.

Information Technologies

Computer Information Technologies CMIT
Associate Degree Program

The utilization of all sizes of computers has extended into every area of business, whether large or small, and into most state and local government agencies. As a result, the need for trained personnel in various areas of computer utilization has increased sharply and is continuing.

The Computer Information Technologies program prepares the student for immediate career opportunities, or to transfer to a four-year college or university to complete a bachelor's degree in Computer Information Systems. The program offers three areas of concentration based on a common core of courses, which allows the student to easily switch or modify tracks, depending on his or her specific interests and future goals. The programmer option emphasizes programming languages. The microcomputer specialist option is designed to meet the growing demand for technical support in microcomputers. The web programming option emphasizes the technical and programming skills necessary to manage and maintain a company's website.

In the computer and IT security option, students learn to assess the risk to a company's data, document security procedures, implement those procedures, and check for security breaches in the system. Graduates would be employed as entry-level Internet, security, network, systems, or support addministrators or specialists; people already working in the field would be prepared to integrate new security skills into their responsibilities, and serve on corporate security teams.

In the microcomputer specialist option, the student will develop proficiencies in several computer applications and knowledge of microcomputer operating systems, database systems, systems analysis and design, local area networks, and computer maintenance. Graduates would typically be employed as the computer systems manager in a small- to medium-sized office.

In the programmer option, students develop professional skills and proficiencies in a variety of programming languages. Graduates typically are employed as entry-level programmers or go into systems analysis and design.

In the web programming option, students will cover the various programming languages needed to create, manage, and maintain a company's website. Students will also cover the development of various links involved, such as database integration. Graduates could be employed by a large firm to manage the company's website, or by several smaller companies.

The faculty in this program are experienced, and teach a very practical, real-world approach to the field, and continue to stay current with the industry.

All degree candidates must complete the curriculum as shown in the catalog at the time of acceptance into the College, whether it be in the Day or Evening program. A minimum grade point average of 2.0 is required in both general and specialized areas for graduation.

COMPUTER AND I.T. SECURITY OPTION **CITS.AS**

SEMESTER 1

No.	Course Title	Class	Lab	Credits
CMPA-103	Microcomputer Applications for Windows	3		3
PROG-109	Information Systems Fundamentals	3		3
PROG-106	Intro. to Structured Programming	3	2	4
ENGL-100	English Composition 1	3		3
OFFS-100	Basic Keyboarding	1		1
	Elective: Math	3		3
		16	2	17

SEMESTER 2

PROG-313	Operating Systems with Windows	3	2	3
PROG-325	Operating Systems with Linux	3		3
PROG-412	Networks 1	3		3
ENGL-200	English Comp. 2: Intro. to Lit. *(or)*			
WRIT-202	Technical Report Writing	3		3
	Elective: Math	3		3
		15	2	15

SEMESTER 3

PROG-326	Advanced Operating Systems with Windows	3	3
PROG-360	Advanced Operating Systems with Linux	3	3
PROG-413	Networks 2	3	3
PROG-350	Internet/Network Security 1	3	3
	Elective: Humanities	3	3
		15	15

SEMESTER 4

PROG-450	Internet/Network Security 2	3	3
PROG-416	Advanced Security Topics	3	3
PROG-414	Networks 3	3	3
	Elective: Social Science	3	3
	Elective: General Education	3	3
		15	15

Upon the successful completion of requirements for this program the degree of **Associate in Science in Computer Information Technologies** will be awarded.

MICROCOMPUTER SPECIALIST OPTION **MCRC.AS**

SEMESTER 1

No.	Course Title	Class	Lab	Credits
PROG-106	Intro. to Structured Programming Using C	3	2	4
PROG-109	Information System Fundamentals	3		3
CMPA-103	Microcomputer Applications for Windows *(or)*	3		3
CMPA-101	Introduction to Word Processing *(and)*			
CMPA-105	Introduction to Excel *(and)*			
CMPA-110	Introduction to Access			
OFFS-100	Basic Keyboarding (Note 1)	1		1
ENGL-100	English Composition 1	3		3
MATH-122	Applied Mathematics 1 *(or)*			
	Elective: Mathematics (Notes 2,3)	3		3
		16	2	17

SEMESTER 2

PROG-140	Computer Maintenance 1	3	3
PROG-313	Operating Systems	3	3
PROG-412	Networks 1	3	3
ENGL-200	English Comp. 2: Intro. to Lit.(Note 3) *(or)*		
WRIT-202	Technical Report Writing	3	3
MATH-222	Applied Mathematics 2 (Notes 2,3) *(or)*		
	Elective: Mathematics	3	3
		15	15

SEMESTER 3				
PROG-240	Computer Maintenance 2	3		3
PROG-314	Database Systems	3		3
PROG-325	Unix OS	3		3
PROG-413	Networks 2	3		3
	Elective: Humanities	3		3
		15		15
SEMESTER 4				
PROG-350	Internet/Network Security 1	3		3
PROG-420	Computer User Support	3	2	4
	Elective: School of Business	3		3
	Elective: General Educ. (Note 5)	3		3
	Elective: Social Science	3		3
		15	2	16

Note 1: This course may be waived if a student can pass a typing test at 20 wpm

Note 2: Math electives must be at level 100 or higher

Note 3: Students who plan to transfer to a four-year college should take MATH-122 Applied Math 1, MATH-222 Applied Math 2, ENGL-200 English Composition 2

Note 4: General education elective may be selected from the following: humanities, social sciences, mathematics, or natural science

Upon the successful completion of requirements for this program, the degree of **Associate in Science** in **Computer Information Technologies** will be awarded.

PROGRAMMER OPTION **PROG.AS**

SEMESTER 1

No.	Course Title	Class	Lab	Credits
PROG-106	Intro. to Structured Programming Using C	3	2	4
PROG-109	Information System Fundamentals	3		3
CMPA-103	Microcomputer Applications for Windows *(or)*	3		3
CMPA-101	Introduction to Word Processing *(and)*			
CMPA-105	Introduction to Excel *(and)*			
CMPA-110	Introduction to Access			
OFFS-100	Basic Keyboarding (Note 2)	1		1
ENGL-100	English Composition 1	3		3
MATH-122	Applied Mathematics 1 (Note 3) *(or)*			
	Elective: Mathematics (Notes 3,4)	3		3
		16	2	17

SEMESTER 2				
PROG-302	COBOL 1	3	2	4
PROG-313	Operating Systems	3		3
PROG-406	C++ Programming	3	2	4
MATH-222	Applied Mathematics 2 (Note 3) *(or)*			
	Elective: Mathematics	3		3
ENGL-200	English Composition 2: Intro. to Literature (Note 4) *(or)*			
WRIT-202	Technical Report Writing	3		3
		15	4	17
SEMESTER 3				
PROG-208	Visual Basic.NET 1	3	2	4
PROG-314	Database Systems	3		3
PROG-402	COBOL 2 *(or)*			
PROG-308	Visual Basic.NET 2 *(or)*			
PROG-407	Java Programming (Note 6) *(or)*	3	2	4
PROG-404	Visual Basic.Net			
ACCT-113	Accounting/Financial (Note 1) *(or)*			
ACCT-110	Accounting 1	5		4
	Elective: Humanities (Note 4)	3		3
		17	4	18
SEMESTER 4				
PROG-308	Visual Basic.NET 2 *(or)*			
PROG-407	Java Programming (Note 6) *(or)*			
PROG-402	COBOL 2 *(or)*	3	2	4
PROG-404	Visual Basic.Net			
PROG-410	Systems Analysis and Design	3		3
	Elective: General Education (Note 5)	3		3
	Elective: School of Business	3		3
	Elective: Social Science	3		3
		15	2	16

Note 1: Students planning to transfer to a four-year college should take ACCT-113

Note 2: This course may be waived if a student can pass a typing test at 20 wpm

Note 3: Math electives must be at level 100 or higher

Note 4: Students who plan to transfer to a four-year college should take MATH-122 Applied Math 1, MATH-222 Applied Math 2, ENGL-200 English Composition 2

Note 5: General education elective may be selected from the following: humanities, social sciences, math, or science

Note 6: Students must take two of the three choices.

Upon the successful completion of requirements for this program, the degree of **Associate in Science in Computer Information Technologies** will be awarded.

WEB PROGRAMMING OPTION **WEBP.AS**

This two-year degree option is designed for an individual who wants an IT career that emphasizes the programming aspects of websites. While design and maintenance are highlighted, the focus is web languages and scripting.

SEMESTER 1

No.	Course Title	Class	Lab	Credits
PROG-106	Intro. to Structured Programming Using C	3	2	4
PROG-109	Information Systems Fundamentals	3		3
CMPA-103	Microcomputer Applications for Windows *(or)*	3		3
CMPA-101	Introduction to Word Processing *(and)*			
CMPA-105	Introduction to Excel *(and)*			
CMPA-110	Introduction to Access			
OFFS-100	Basic Keyboarding Skills	1		1
ENGL-100	English Composition 1	3		3
	Elective: Mathematics	3		3
		16	2	17

SEMESTER 2

PROG-313	Operating Systems	3		3
MRKT-333	Marketing for the Internet	3		3
WEBS-324	Web Authoring	3	2	4
ENGL-200	English Comp. 2: Intro. to Literature *(or)*			
WRIT-202	Technical Report Writing	3		3
		12	2	13

SEMESTER 3

PROG-208	Visual Basic.NET 1	3	2	4
PROG-314	Database Systems	3		3
WEBS-328	Web Scripting	3		3
	Elective: Social Science	3		3
	Elective: Mathematics	3		3
		15	2	16

SEMESTER 4

WEBS-424	Advanced Web Authoring	3	2	4
PROG-406	Java Programming *(or)*			
PROG-407	C++ Programming	3	2	4
	Elective: Computer Info. Tech. *	3	2	4
	Elective: General Education	3		3
	Elective: Humanities	3		3
		15	6	18

* Choose one course from PROG or WEBS, 200 level or higher.

Upon successful completion of the requirements for this program, the degree of **Associate in Science in Computer Information Technologies** will be awarded.

WEB PROGRAMMING **WEBP.COC**
Certificate of Completion program

Prerequisite: Students must have completed CMPA-103 Microcomputer Applications for Windows before entering the program

No.	Course Title	Class	Lab	Credits
PROG-106	Intro. to Structured Programming Using C	3	2	4
PROG-109	Information Systems Fundamentals	3		3
WEBS-100	Internet Certification	3		3
WEBS-324	Web Authoring	3	2	4
WEBS-328	Web Scripting	3		3
PROG-313	Windows Operating System	3		3
PROG-314	Database Systems	3		3
Choose one of the following:				
PROG-406	C++ Programming *(or)*			
PROG-407	Java Programming *(or)*			
WEBS-424	Advanced Web Authoring	3	2	4
		24	6	27

This certificate can be completed in two semesters by taking the first three courses in the first semester and the next four, plus either PROG-406 or PROG-407, in the second semester.

Upon successful completion of the requirements for this program, a **Certificate of Completion** in **Web Programming** from STCC will be awarded.

MICROCOMPUTER SPECIALIST **MCRC.COC**
Certificate of Completion program

Successful completion of the following required courses would prepare the student for employment as a computer systems manager of a small- to medium-sized office. This could involve doing routine maintenance, upgrades of hardware and software, minor hardware repairs, and software installations, as well as having a solid foundation in several computer applications.

No.	Course Title	Class	Lab	Credits
PROG-106	Intro. to Structured Programming Using C	3	2	4
PROG-109	Information Systems Fund. *(and)*	3		3
CMPA-103	Microcomputer Applications for Windows *(or)*	3		3
CMPA-101	Introduction to Word Processing *(and)*			
CMPA-105	Introduction to Excel *(and)*			
CMPA-110	Introduction to Access			
PROG-140	Computer Maintenance 1	3		3
PROG-313	Operating Systems	2	2	3
PROG-325	Unix Operating System	3		3
PROG-412	Networks 1	3		3
PROG-413	Networks 2 *(or)*			
PROG-314	Database Systems	2	2	3
PROG-420	Computer User Support	3	3	4
		25	9	29

Upon successful completion of the requirements of this program, a **Certificate of Completion** in **Microcomputer Specialist** from STCC will be awarded.

PROGRAMMER **PROG.COC**
Certificate of Completion program

Successful completion of the following required courses would prepare the student for employment as an entry-level programmer. The numerous programming languages give the student a wide variety of potential employment opportunities

.

No.	Course Title	Class	Lab	Credits
PROG-106	Intro. to Structured Programming Using C	3	2	4
PROG-109	Info. Systems Fundamentals *(and)*	3		3
CMPA-103	Microcomputer Applications for Windows *(or)*	3		3
CMPA-101	Introduction to Word Processing *(and)*			
CMPA-105	Introduction to Excel *(and)*			
CMPA-110	Introduction to Access			
PROG-203	Visual Basic 1	3	2	4
PROG-302	COBOL 1	3	2	4
PROG-304	Visual Basic 2 *(or)*			
PROG-407	Java Programming (Note 1) *(or)*	3	2	4
PROG-402	COBOL 2	3	2	4
PROG-406	C++ Programming	3	2	4
		24	12	30

Note 1: Students must take two out of the three programming language choices.

Upon successful completion of the requirements for this program, a **Certificate of Completion** in **Programmer** from STCC will be awarded.

Health Information Technologies HINT

The healthcare profession is undergoing tremendous change. Trained professionals in medical coding, billing, and reimbursement are in high demand. The health information technician interprets information from the medical chart and converts it to numbers. This technician may work as a coding specialist who supports clinical care and assists medical research in hospitals and other healthcare facilities. The billing specialist provides information for reimbursement purposes, and ensures that the correct documentation is submitted with health claims. Professionals are also needed to apply cash to patient accounts after payments are received from patients or insurance companies.

The medical coding and billing specialist may work for hospitals, ambulatory centers, visiting nursing associations, insurance companies, ambulance companies, dental and physician offices, and many other health organizations. After several years of work experience, the specialist may also work from home as an independent medical biller.

A professional with coding, billing, reimbursement and cash application skills will have many career options. Such professionals will be in demand as physicians, physical therapists, mid-level practitioners, and other health professionals establish new practices. The demand for skilled professionals is great, and the room for advancement is tremendous.

MEDICAL CODING AND BILLING SPECIALIST OPTION MCBS.AS

Associate in Science in Office Information Technologies

This program prepares students for employment in hospitals, ambulatory centers, visiting nurse associations, insurance companies, dental and physician offices, and many other health organizations as a medical coder/billing specialist. After several years of work experience, the graduate may also work from home as an independent medical biller/coder.

Students will be prepared to take the Certifed Coding Assistant (CCA) examination administered by the American Health Information Management Association (AHIMA). This examination is required by many employers for entry-level coding positions.

Program prerequisites:

- Placement in college-level reading
- Placement in ALGB-091
- Placement in ENGL-100
- Completion of Medical Terminology (MAST-101)
- Familiarity with operating computers (or take CMPA-098 or CMPA-100)

SEMESTER 1

No.	Course Title	Class	Lab	Credits
BIOL-143	Fund. of Anatomy & Physiology 1	3		3
CMPA-103	Microcomputer Applications for Windows	3		3
ENGL-100	English Composition 1	3		3
MEDC-120	Intro. to Diagnostic Coding	4		4
MEDC-121	Intro. to Procedural Coding	4		4
		17		17

SEMESTER 2

ENGL-200	English Comp. 2: Intro. to Literature	3		3
BIOL-243	Fund. of Anatomy & Physiology 2	3		3
MAST-301	Introduction to Human Disease	3		3
MEDC-218	Health Insurance and Reimbursement Management	3		3
MEDC-220	Technical Applications of Billing and Reimbursement Management	2		2
MEDC-305	Advanced Coding	3		3
		17		17

SEMESTER 3

ACCT-110	Accounting 1	5		4
CMPA-116	Data Entry Keyboarding	3		3
MEDC-401	Health Information Management	3		3
PSYC-100	General Psychology *(or)*			
SOCL-100	Introduction to Sociology	3		3
		14		13

SEMESTER 4

MEDC-301	Cooperative Education for HIT	3		3
MEDC-405	Certification Exam Preparation for Health Information Technologies	2		2
	Elective: Business Division	3		3
	Elective: Business Department	3		3
	Elective: General Education	3		3
		14		14

Upon successful completion of the requirements for this program, the degree of **Associate in Science in Office Information Technologies** will be awarded.

MEDICAL CODING AND BILLING SPECIALIST **MEDC.COC**
Certificate of Completion Program

The Medical Coding and Billing curriculum is planned to improve the accuracy, consistency, and reliability of health data; to increase the supply of quality coding, billing, and reimbursement specialists; and to provide assurance of qualifications to institutions when they are subject to review. Coding is the transformation of verbal descriptions of diseases, injuries, and procedures into numerical designations.

Students must achieve a minimum "C" (73%) or better in every course. The student who is unable to meet the minimum requirement will be withdrawn from the program. An applicant for the program must be a high school graduate or the equivalent (GED) or have a United States high school equivalency as evaluated by a credential evaluation service for foreign-educated candidates. She/he must place on the ENGL-100 level on the STCC English placement test.

The Medical Coding and Billing student must be able to meet the following technical standards: possess motor skills, manual dexterity, vision/hearing normal or device-corrected, eye/hand coordination, and skill in the art of oral and written communications.

Applicants must be high school graduates or hold a certificate of equivalency. Courses in the use of computer skills and/or life experience in detailed administrative skills will be positively evaluated.

SEMESTER 1

No.	Course Title	Class	Lab	Credits
MEDC-120	Intro. to Diagnostic Coding	4		4
MEDC-121	Intro. to Procedural Coding	4		4
BIOL-143	Fund. of Anatomy & Physiology 1	3		3
CMPA-103	Microcomputer Applications for Windows	3		3
		14		14

SEMESTER 2

MAST-301	Introduction to Human Disease	3		3
MEDC-218	Health Insurance and Reimbursement Mgmt.	3		3
MEDC-220	Technical Applications of Billing and Reimbursement Management	2		2
MEDC-305	Advanced Medical Coding	3		3
BIOL-243	Fund. of Anatomy & Physiology 2	3		3
		14		14

Upon the successful completion of the requirements of this program, a **Certificate of Completion** in **Medical Coding and Billing Specialist** from STCC will be awarded.

Office Information Technologies OFIT

These programs are some of the most exciting ones offered on campus. Their curricula reflect the rapid changes taking place in offices today. The modern office is being revolutionized by increasingly sophisticated technologies, and a "new breed" of office professional is using them for telecommunications, word processing, spreadsheets, database management, and desktop publishing. The "Office of the Future" has already arrived, bringing with it integrated information systems and specialists who can use them to organize, manage, and administer office functions. The national shortage of office personnel, rapid technological advances, new opportunities for increased earning potential and career advancement all make any one of these programs an excellent choice for distinctive business training.

Today's office specialist is seen as part of the management team, and has administrative responsibility that may include planning, organizing, and directing certain activities and functions. Promotional possibilities include administrative specialist, office manager, and other similar positions. And today's specialist command higher and higher salaries. At a time when administrators and specialists have become increasingly important to business, there is a critical shortage. As a result, titles, benefits, roles, and responsibilities are all enhanced.

The **Office Information Technologies** programs offer several unique programs: the one-year **Clerical Office Assistant** certificate program; the certificate of completion in **Microsoft Office**; and the **Office Information Technologies - Executive** degree program and options.

All of our programs offer special career opportunities and specific academic studies. Many of these academic studies are common to all programs, and several are unique. Entering students may already have some well-developed skills in keyboarding and word processing that would make them eligible for challenge examinations, which are designed to allow credit for acquired skills. Students who demonstrate satisfactory results on these exams can enroll in advanced courses in related areas.

These programs are intensive, and require approximately 30 to 40 hours of study outside class each week. While this requirement may seem excessive, the investment of time will be worthwhile because it will bring many rewards in job satisfaction and career advancement. Our courses, faculty, and extensive new training facilities are state-of-the-art, and cannot be matched in the region.

Minimum English and Math Skills Requirements:

Students must place in ENGL-100 prior to registering for first semester courses.

Enrolling students are required to take math, reading and English placement tests. If students have been out of school for a number of years, or are weak in math reading comprehension, and/or English, it would be wise to review these skills before taking the placement tests. Depending on the test results and the program selected, it might be wise to enroll in one or more of the following English and math courses before the first semester of courses.

English
EWRT-088 Basic Writing Skills
DRDG-091-2 Reading Level 1-2
DWRT-099 Review for College Writing

Math
ARTH-071 Pre-Algebra
ALGB-087 Lecture Algebra 1
ALGB-097 Lecture Algebra 2

Minimum Grade Requirement: Students are required to achieve a "C" (73%) or better as a final grade in specified courses. A minimum quality point average of 2.0 is required for graduation.

Minimum Speed Requirements: Students are required to achieve the minimum "Speed Requirements" specified for individual courses. A minimum speed requirement of 50 WPM for 5 minutes with 5 errors or less is required for students graduating from the Office Information Technologies - Executive program.

Minimum Standards: Third and fourth semester students in specified programs are required to achieve minimum "Mailability Standards."

Cooperative Education: Cooperative Education is available to eligible seniors who wish to enhance their education with work experience. Co-Op work must follow guidelines established by the program and the Cooperative Education Office.

OFFICE INFORMATION TECHNOLOGIES - EXECUTIVE — EXEC.AS
Associate Degree Program

The Associate in Science degree program prepares students for careers as office professionals in a variety of businesses such as manufacturing, insurance, retail, legal, etc. This program is perfect for the highly motivated individual seeking variety and challenge in an exciting field. The program offers courses in software application programs, transcription, office communications, and computer integrated systems. Graduates can apply for a wide variety of office administration positions.

SEMESTER 1

No.	Course Title	Class	Lab	Credits
CMPA-100	Intro. to Computers, Windows, & Email	3	1	1
CMPA-115	Introduction to the Internet	1		1
CMPA-116	Data Entry Keyboarding	3		3
CMPA-120	Intro. to PowerPoint	1		1
OFFS-105	Office Communications/Editing	3		3
OFFS-120	Customer Relations	3		3
ENGL-100	English Composition 1	3		3
		17	1	15

SEMESTER 2

CMPA-102	Word Processing	3	3
CLER-204	Intro. to Machine Transcription	3	3
OFFS-200	Keyboard Skill Building	1	1
OFFS-210	Comnmunications/Editing	3	3
PSYC-100	General Psychology *(or)*		
SOCL-100	Intro. to Sociology	3	3
ENGL-200	English Comp. 2: Intro. to Literature	3	3
		16	16

SEMESTER 3

OFFS-304	Machine Transcription	3	3
CMPA-109	Excel	3	3
CMPA-111	Access	3	3
CMPA-202	Advanced Word Processing	3	3
ENGL-201	Business English	3	3
		15	15

SEMESTER 4

BUSN-101	Office Accounting 1	3	3
CMPA-320	Desktop Publishing	3	3
SPCH-203	Fundamentals of Speech	3	3
	Elective: Social Science	3	3
	Elective: General Education (Note)	3	3
		15	15

Note: Humanities, social science, or math elective

Upon the successful completion of requirements for this program, the degree of **Associate in Science in Office Information Technologies** will be awarded.

MEDICAL OFFICE INFORMATION TECHNOLOGY — EXMD.AS
OPTION TO OFFICE INFORMATION TECH. - EXECUTIVE

This option prepares students for the highly specialized non-clinical medical office environment. This program is perfect for the medically minded student seeking employment performing administrative medical procedures in the fascinating and challenging field of medicine.

SEMESTER 1

No.	Course Title	Class	Lab	Credit
CMPA-100	Intro. to Computers, Windows & Email	3	1	1
CMPA-115	Introduction to the Internet	1		1
CMPA-116	Data Entry Keyboarding	3		3
CMPA-120	Introduction to PowerPoint	1		1
OFFS-105	Office Communications/Editing	3		3
OFFS-120	Customer Relations	3		3
ENGL-100	English Composition 1	3		3
		17	1	15

SEMESTER 2

MAST-101	Medical Terminology 1	3		3
CLER-204	Intro. to Machine Transcription	3		3
OFFS-200	Keyboard Skill Building	1		1
CMPA-102	Word Processing	3		3
ENGL-200	English Comp. 2: Intro. to Literature	3		3
PSYC-100	General Psychology *(or)*			
SOCL-100	Introduction to Sociology	3		3
		16		16

SEMESTER 3

MEDC-110	Intro. to Coding and Health Insurance	3		3
MOFF-454	Medical Machine Transcription	3		3
CMPA-109	Excel	3		3
CMPA-202	Advanced Word Processing	3		3
BIOL-143	Fund. of Anatomy & Physiology 1	3		3
		15		15

SEMESTER 4

MOFF-300	Medical Office Management	3		3
MOFF-456	Advanced Medical Machine Transcription	3		3
SPCH-203	Fundamentals of Speech	3		3
BIOL-243	Fund. of Anatomy & Physiology 2	3		3
	Elective: Humanities/Soc. Sci./Math	3		3
		16		16

Upon the successful completion of requirements for this program, the degree of **Associate in Science in Office Information Technologies** will be awarded.

COMPUTER SOFTWARE APPLICATIONS SPECIALIST OPTION TO OFFICE INFORMATION TECH. - EXECUTIVE

CSAS.AS

The focal point of this program is to prepare students for the Core and Expert skills required for the Microsoft Office Specialist certification. This certification is a globally-recognized standard for validating expertise with the Microsoft Office suite of business productivity applications. The benefits of certification include: (1) increased productivity at work, (2) greater earning potential, and (3) more employment opportunities in the job market. Earning this certification acknowledges that students have the expertise to work with Microsoft Office programs: Word, Excel, Access, Outlook, and PowerPoint. Springfield Technical Community College is a recognized testing site for Microsoft Office Specialist certification.

Students must place in ENGL-100, college-level reading, and MATH-100 (or be exempt) before enrolling in any information technology course.

SEMESTER 1

No.	Course Title	Class	Lab	Credit
CMPA-100	Intro. to Computers, Windows & E-mail	3	1	1
CMPA-116	Data Entry Keyboarding	3		3
OFFS-105	Communications/Editing 1	3		3
OFFS-125	Ten-Key Pad	1		1
ENGL-100	English Composition 1	3		3
	Elective: Mathematics	3		3
		16	1	14

SEMESTER 2

CMPA-107	Introduction to QuickBooks	2		2
CMPA-102	Word Processing	3		3
CMPA-121	PowerPoint Applications	2		2
OFFS-210	Communications/Editing 2	3		3
ENGL-200	English Comp. 2: Intro. to Literature	3		3
PROG-109	Information Systems Fundamentals	3		3
		16		16

SEMESTER 3

CMPA-109	Excel	3		3
CMPA-111	Access	3		3
CMPA-202	Advanced Word Processing	3		3
WEBS-100	Internet Certification	3		3
SPCH-203	Fundamentals of Speech	3		3
WRIT-202	Technical Report Writing	3		3
		18		18

SEMESTER 4

CMPA-240	Excel/Access Applications	3	3
PROG-313	Operating Systems	3	3
PSYC-100	General Psychology (or)		
SOCL-100	Introduction to Sociology	3	3
	Elective: School of Business (Note 1)	3	3
	Elective: General Education	3	3
		15	15

Note 1: **Suggested Electives:**
OFFS-216 Administrative/Management Communications
OFFS-497 Office InformationTechnology Cooperative Education
SMBE-125 Introduction to Entrepreneurship

Upon sucessful completion of the requirements for this program, the degree of **Associate in Science in Office Information Technologies** will be awarded.

CLERICAL OFFICE ASSISTANT — CLER.CRT

Certificate Program

This one-year program prepares men and women for basic office responsibilities. This is an especially good program for students with undefined career goals and/or the need to enter the job market as soon as possible. Most credits can be transferred into the Office Information Technologies - Executive program.

Minimum English skills requirement: Students must place in ENGL-100 on the English placement test prior to registering for their first semester classes.

SEMESTER 1

No.	Course Title	Class	Lab	Credits
CMPA-100	Computers, Windows, and Email *(5 weeks)*	1		1
CMPA-115	Introduction to the Internet *(or)*			
CMPA-120	Introduction to PowerPoint	1		1
OFFS-116	Keyboarding Applications 1	3		3
OFFS-117	Office Procedures	3		3
OFFS-125	Ten-Key Pad	1		1
ENGL-100	English Composition 1	3		3
PSYC-100	General Psychology *(or)*			
SOCL-100	Introduction to Sociology	3		3
		15		15

SEMESTER 2

CMPA-105	Introduction to Excel	1	1
CMPA-110	Introduction to Access	1	1
CMPA-102	Word Processing	3	3
OFFS-105	Office Communications Editing	3	3
OFFS-200	Keyboard Skill Building	1	1
ENGL-201	Business English	3	3
	Elective: General	3	3
		15	15

Upon the successful completion of requirements of this program, a **Certificate in Clerical Office Assistant** will be awarded.

COMPUTER SOFTWARE APPLICATIONS — CSAC.COC

Certificate of Completion program

This one-year certificate of completion program introduces students to Microsoft Office. Students will learn the intermediate (and some advanced) features of word processing, spreadsheets, databases, and presentations. This program also prepares students for the core skills required for the Microsoft Office Specialist (MOS) certification. MOS certification is a globally-recognized standard for validating expertise with the Microsoft Office suite (Word, Excel, Access, and PowerPoint.)

Program requirements

Students must complete the following prior to taking any Office Information Technologies course:

- Placement in college-level reading
- Placement at ENGL-100 or completion of DWRT-099
- Placement in college-level math
- OFFS-100 or touch keyboarding rate of 25 words per minute
- Familiarity with Microsoft Windows operating system

SEMESTER 1

No.	Course Title	Class	Lab	Credits
CMPA-102	Word Processing	3		3
CMPA-109	Excel	3		3
CMPA-115	Introduction to the Internet	3		1
CMPA-121	PowerPoint	2		2
OFFS-120	Customer Relations	3		3
		14		12

SEMESTER 2

OFFS-105	Office Communications 1	3		3
CMPA-111	Access	3		3
BUSN-101	Office Accounting	3		3
CMPA-202	Advanced Word Processing	3		3
CMPA-320	Desktop Publishing	3		3
		15		15

Upon successful completion of the requirements for this program, a **Certificate of Completion in Computer Software Applications** from STCC will be awarded.

MMICROSOFT OFFICE **MOUS.COC**
Certificate of Completion program

This one-year certificate of completion program prepares students for the Core skills required for the Microsoft Office Specialist certification. This certification is a globally-recognized standard for validating expertise with the Microsoft Office suite of business productivity applications. The benefits of certification include: (1) increased productivity at work, (2) greater earning potential, and (3) more employment opportunities in the job market. Earning this certification acknowledges that students have the expertise to work with Microsoft Office programs: Word, Excel, Access, and PowerPoint. Springfield Technical Community College is a recognized testing site for Microsoft Office Specialist certification.

Entrance requirements:

1) Entrance assessment scores: ENGL-100, ALGB-097, and college-level reading
2) Keyboarding rate of 30 wpm/3 minutes/3 errors or less
3) Familiarity with Windows operating systems

SEMESTER 1

No.	Course Title	Class	Lab	Credits
CMPA-102	Word Processing	3		3
CMPA-109	Excel	3		3
CMPA-111	Access	3		3
ENGL-100	English Composition1	3		3
WEBS-100	Internet Certification	3		3
		15		15

SEMESTER 2

CMPA-121	PowerPoint Applications	2		2
CMPA-202	Advanced Word Processing	3		3
CMPA-240	Excel/Access Applications	3		3
PROG-109	Information Systems Fundamentals	3		3
PROG-313	Operating Systems	3		3
		14		14

Upon successful completion of the requirements for this program, a **Certificate of Completion in Microsoft Office** from STCC will be awarded.

Engineering Technologies

Jim Whalen, Chief Engineer for Daniel O'Connell's Sons, takes Construction Management students from the Civil Engineering Technology department on a tour of the federal courthouse construction site in Springfield. Jim is a graduate of STCC's Civil Engineering Technology program.

Automotive Technology AUTO.AS

Associate Degree Program

The automotive service technician of today is required to have a strong background in electrical, electronics, mathematics, and science in order to understand and diagnose new computerized control systems, and to keep pace with the ever-changing technology in the automotive industry.

Major areas of instruction include electrical, brake, electronic, and advanced control systems, as well as gas engine, climate control, diesel engine, suspension and steering, and automatic, manual, and 4x4 transmission and transaxle operations. Students diagnose and service these automotive components and systems in our lab and during co-op using late model Ford, Lincoln, Mercury, and Mazda vehicles.

The STCC Automotive Technology program is affiliated with Ford Motor Company's ASSET (Automotive Student Service Educational Training) program. In this two-year program, students will study academics and automotive technology during one half (8 weeks) of each semester on campus. The other half of each semester (8 weeks) will be spent at their sponsoring Ford, Lincoln, Mercury or Mazda dealership in a **paid**, graded cooperative (on the job) educational timeframe.

Students will be required to purchase a basic set of tools during their first semester of study, to be used during their co-ops each semester. (STCC/Ford ASSET students qualify for a 50% discount on tool purchases from two major automotive tool vendors who will meet with students on campus during the first weeks of class.)

The two-year program is open for new students every year. An optional two and one-half year program can be arranged for students. The majority of required academic courses can be completed during the optional semester, which will decrease the student course load throughout the two-year program.

All students are required to take our English, reading, and mathematics placement exams. If results indicate DWRT-099 on the English placement exam, students must take DWRT-099 in the summer preceding or during the first fall semester. If the mathematics placement exam results indicate lower than ALGB-091, students must take the necessary prerequisite math course(s) during the first fall semester. If the reading placement exam indicates DRDG-091 or 092, the necessary prerequisite reading courses must be taken preceding or during the first fall semester. Placement test results will be discussed with the administrative staff of the STCC/Ford ASSET program during the application process to assure the appropriate registration for any remedial classes is accomplished.

Upon the successful completion of requirements for this program, ASSET graduates will earn an associate degree in automotive technology, and can earn up to 90% of the same Ford training credentials that technicians receive from Ford Motor Company training centers, and have hands-on dealership experience.

SEMESTER 1

No.	Course Title	Class	Lab	Credits
AUTO-112	Electrical Systems	2	3	3
AUTO-115	Brake Systems	2	3	3
AUTO-197	Automotive Technology Co-op	3		3
ESET-240	Automotive Electronics 1	3	3	4
		10	9	13

SEMESTER 2

AUTO-210	Gasoline Engine Service	2	3	3
AUTO-212	Automotive Electronic Systems	2	3	3
AUTO-297	Automotive Technology Co-op	3		3
ESET-345	Automotive Electronics 2	3	3	4
ENGL-100	English Composition 1	3		3
	Elective: Math (100 level or higher)	3		3
		16	9	19

SUMMER SESSION

AUTO-240	Climate Control	2	3	3
AUTO-250	Diesel Engine Operations	1	2	2
		3	5	5

SEMESTER 3

AUTO-340	Suspension and Steering	2	3	3
AUTO-350	Transmissions and Transaxle 1	2	3	3
AUTO-397	Automotive Technology Co-op	3		3
CMPA-103	Microcomputer Applications for Windows	3		3
WRIT-202	Technical Report Writing	3		3
PSYC-100	General Psychology	3		3
		16	6	18

SEMESTER 4

AUTO-440	Advanced Control Systems	3	3	4
AUTO-450	Transmissions and Transaxle 2	2	3	3
AUTO-497	Automotive Technology Co-op	3		3
SPCH-203	Fundamentals of Speech	3		3
	Elective: Social Science	3		3
		14	6	16

Upon successful completion of the requirements of this program, the degree of **Associate in Science in Automotive Technology** will be awarded.

Civil Engineering Technology CIVL.AS

Associate Degree Program

The Civil Engineering Technology program prepares students for successful employment in the professional fields related to construction. These fields include architecture, construction, engineering, planning, design, and management. The program provides a broad engineering background for employment in industries that require knowledge of design, surveying, drafting, CAD, and estimating, or as preparation for further study for a bachelor's degree at a four-year college or university.

Aspects of design, construction techniques, soils engineering, materials testing, and construction/project management are included in the curriculum. Design of residential and light commercial structures emphasizes the basic elements of design applying to a wide range of construction projects. Elements of roadway and transportation corridor design and layout are also covered. Graduates are successfully employed in the fields of design, engineering, contracting, and testing/ quality assurance.

Employment is generally found with private consultants, construction contractors, and local, state, and federal agencies, or as successful entrepreneurs starting independent companies. Graduates enjoy an excellent placement record with challenging career growth opportunities, including promotion into a variety of senior management and executive positions in local industry.

Minimum grade requirements: Department courses shall be completed with a grade of "D" (63%) or better. A QPA of 2.0 must be achieved for graduation. To continue in the program, the math requirements listed below must be satisfied. Also, at the beginning of the third and fourth semesters, the student must have a QPA of at least 1.7 and 1.9 respectively. Failure to meet the academic standards will result in academic probation.

Upon successful completion of the program requirements listed below, the degree of **Associate in Science in Civil Engineering Technology** will be awarded.

SEMESTER 1

No.	Course Title	Class	Lab	Credits
ENGL-100	English Composition 1	3		3
MATH-132	Technical Mathematics 1 (Note 1)	4		4
CMPA-105	Introduction to Excel	1		1
CIVL-115	Construction Materials and Methods	3		3
CIVL-120	Architectural Design	2	6	4
CIVL-125	Architectural CAD 1	2	4	3
		15	10	18

SEMESTER 2

MATH-232	Technical Mathematics 2 (Note 2)	4		4
PHYS-119	Technical Physics *(or)*			
PHYS-130	College Physics 1	3	3	4
CIVL-220	Construction Estimating	2	3	3
CIVL-225	Architectural CAD 2 (Note 3)	2	4	3
CIVL-235	Hydraulics and Hydrology	2	3	3
		14	12	17

SEMESTER 3				
CIVL-310	Surveying 1	2	6	4
CIVL-325	Soils and Foundations	3	3	4
CIVL-345	Statics and Strength of Materials	3	3	4
WRIT-202	Technical Report Writing	3		3
ECON-100	Economics 1 (Note 4)	3		3
		14	12	18
SEMESTER 4				
CIVL-410	Reinforced Concrete Analysis (Note 5)	2	3	3
CIVL-420	Construction Management	3		3
CIVL-430	Transportation Engineering	2	3	3
CIVL-446	Structures (Note 5)	2	4	3
CIVL-460	Project Scheduling	2	3	3
	Elective: Science/Technical (Note 4)	3		3
		14	13	18

NOTES:

(1) MATH-132 must be completed before any third or fourth semester Civil Engineering Technology (CIVL) courses can be taken.

(2) MATH-232 must be completed before any fourth semester Civil Engineering Technology (CIVL) courses can be taken.

(3) CIVL-120 and CIVL-125 are prerequisites.

(4) Potential transfer students intending to pursue BSCE/BSCET degree should take CHEM-103 (General Chemistry 1) in the third semester and Economics 1 in the fourth semester. Technical elective may be CIVL-470 (Geographic Information Systems) taken in the fourth semester, with ECON-100 taken in the third semester.

(5) CIVL-345 Statics and Strength of Materials is a prerequisite.

Check course descriptions in this catalog for additional prerequisites.

ARCHITECTURAL TECHNOLOGY TRANSFER OPTION TO CIVIL ENGINEERING TECHNOLOGY — ARCH.AS

The Architectural Technology Transfer associate degree option is a two-year program of study that is designed to develop the student's design skills and the technical knowledge required to work with a broad range of construction methods and materials. Students become technically proficient in the three major graphic areas of free-hand drawing, architectural drafting, and computer-aided design. As a joint admission program with the University of Massachusetts and the Boston Architectural Center, this program may serve as the first two years of study in an undergraduate degree in architectural studies.

In the first year of this program, students build the necessary skills to enter a technical work environment, working with architectural drafting and AutoCAD. Students develop basic design skills by designing their own residential projects, estimating the cost of construction and becoming familiar with the variety of

construction materials and methods used in the construction industry today. Some Certificate graduates will use their new skills for an entry-level position in an architectural office.

In the second year of this program, students work in depth to build their graphic communication skills in both two-dimensional and three-dimensional visual art courses. The elements and principles of graphic communication are explored in a variety of mediums. The second year culminates with an architectural studio course that will serve as a capstone experience, pulling together all of the students' presentation skills and knowledge in a portfolio of their projects. Students will display their projects in a presentation that will be reviewed by design professionals. This portfolio will then serve as part of the application requirement for placement in future architectural studies and career placement.

SEMESTER 1

No.	Course Title	Class	Lab	Credits
CIVL-115	Construction Materials and Methods	3		3
CIVL-120	Architectural Design	2	6	4
CIVL-125	Architectural CAD 1	2	4	3
ENGL-100	English Composition 1	3		3
CMPA-105	Intro. to Excel	1		1
MATH-132	Technical Math 1	4		4
		15	10	18

SEMESTER 2

CIVL-220	Construction Estimating	2	3	3
CIVL-225	Architectural CAD 2	2	4	3
PHYS-130	College Physics 1 *(or)*			
PHYS-119	Technical Physics	3	3	4
WRIT-202	Technical Report Writing	3		3
MATH-232	Technical Math 2	4		4
		14	10	17

SEMESTER 3

CIVL-345	Statics and Strength of Materials	3	3	4
ARTS-146	Design Investigations	2	3	3
ARTS-147	Basic Drawing	2	3	3
ARTS-150	Intro. to Photography	3	2	3
	Elective: Social Science	3		3
		13	11	16

SEMESTER 4

CIVL-420	Construction Management	3		3
CIVL-451	Architectural Studio	3	3	4
ARTS-149	Drawing and Composition	3		3
ARTS-246	Basic Design 2	6		3
ARTS-315	3D Design	5		3
	Elective: General Education	3		3
		23	3	19

ARCHITECTURAL TECHNOLOGY **CIVL.COC**
Certificate of Completion program *

This program prepares students for entry-level positions in the field of architectural drafting and design. Students gain skills in CAD (computer-aided drafting using AutoCAD), project estimating, and construction management.

Students who complete the required course of study in this Architectural Technology certificate program are prepared for employment as an architectural draftsperson, computer-aided draftsperson/designer, construction estimator, project manager or expediter.

SEMESTER 1

No.	Course Title	Class	Lab	Credits
CIVL-115	Construction Materials and Methods	3		3
CIVL-120	Architectural Design **	2	6	4
CIVL-125	Architectural CAD 1 **	2	4	3
CMPA-105	Intro. to Excel	1		1
ENGL-100	English Composition 1	3		3
		11	10	14

SEMESTER 2

CIVL-220	Construction Estimating	2	3	3
CIVL-225	Architectural CAD 2 *(Note 1)*	2	4	3
CIVL-420	Construction Management	3		3
WRIT-202	Technical Report Writing	3		3
MATH-132	Technical Math 1	4		4
		13	7	15

Note 1: CIVL-120 and CIVL-125 are prerequisites

* Students may enroll in the fall or spring semesters, in day or evening classes

** Transfer credit will be accepted for these or other courses upon receipt of appropriate documentation or submittal of an acceptable portfolio of drawings. A minimum of 22 credits must be satisfactorily completed at STCC with a graduation QPA equal to at least 2.0. A minimum of 12 Civil Engineering Technology credits must be completed at STCC.

Upon successful completion of the requirements of the program, a **Certificate of Completion** in **Architectural Technology** from STCC will be awarded.

CONSTRUCTION MANAGEMENT — CNST.AS
OPTION TO CIVIL ENGINEERING TECHNOLOGY

The Civil Engineering Technology degree option in Construction Management combines construction-related engineering education with business, marketing, and management to allow students to develop the knowledge and skills necessary for a successful career in construction. The construction field encompasses a wide range of technical areas and employment opportunities ranging from field personnel responsible for earth-moving and building projects to support personnel in supply industries as well as management staff. The field of construction accounts for a large portion of the U.S. Gross Domestic Product, meaning that construction is one of the single largest business activities in the country, which can provide a wide variety of exciting and challenging opportunities for employment. Beyond the opportunities for employment, the construction management degree option provides a strong background for pursuit of a bachelor's degree in construction management.

SEMESTER 1

No.	Course Title	Class	Lab	Credits
CIVL-115	Construction Materials and Methods	3		3
CIVL-120	Architectural Design	2	6	4
CIVL-125	Architectural CAD 1	2	4	3
MATH-132	Technical Math 1	4		4
CMPA-103	Microcomputer Applications for Windows	3		3
		14	10	17

SEMESTER 2

CIVL-220	Construction Estimating	2	3	3
ECON-100	Economics 1	3		3
PHYS-130	College Physics 1	3	3	4
ENGL-100	English Composition 1	3		3
MANG-110	Principles of Management	3		3
		14	6	16

SEMESTER 3

CIVL-310	Surveying	2	6	4
CIVL-325	Soils and Foundations *(or)*			
CIVL-410	Reinforced Concrete Analysis	2	3	3
CIVL-345	Statics and Strength of Materials	3	3	4
BLAW-310	Business Law	3		3
WRIT-202	Technical Report Writing *(or)*			
ENGL-200	English Composition 2: Intro. to Lit.	3		3
		13	12	17

SEMESTER 4

CIVL-420	Construction Management	3		3
CIVL-430	Transportation Engineering	2	3	3
CIVL-446	Structures	2	4	3
CIVL-460	Project Scheduling	2	3	3
MANG-427	Organizational Behavior	3		3
	Elective (Note 1)	3		3
		15	10	18

Note 1: Choose from ACCT-110, ACCT-113, MRKT-110, ECON-200, STAT-142, MATH-155, MATH-157

Upon the successful completion of requirements for this program as listed above, the degree of **Associate in Science in Civil Engineering Technology** will be awarded.

CONSTRUCTION MANAGEMENT **CNST.COC**
Certificate of Completion program

This program is designed to assist construction superintendents and supervisors to gain the professional skills necessary to successfully complete their professional responsibilities. The course of study offers management skills necessary for success in the civil/construction field. The program is designed for construction professionals to upgrade their skills, while supporting first-time employment in construction for mid-career professionals and young students.

The graduate of this certificate program will be prepared to estimate project costs, schedule building activities, monitor project control items, inspect field work, and use specialized software. Learning to manage a construction project effectively and efficiently could take your career to another level.

No.	Course Title	Credits
CIVL-115	Construction Materials and Methods	3
CIVL-120	Architectural Design	4
CIVL-220	Construction Estimating	3
CIVL-420	Construction Management	3
CMPA-103	Microcomputer Applications for Windows	3
MATH-117	Contemporary Mathematical Applications	3
MANG-110	Principles of Management	3
	Elective: English	3
	Elective: Business	3
		28

Upon successful completion of the requirements for this program, a **Certificate of Completion in Construction Management** from STCC will be awarded.

Computer Systems Engineering Technology

CSET.AS

Associate Degree Program

Computer Systems Engineering Technology is a continually expanding field offering exciting careers in computer networking, systems integration, systems design, automated manufacturing, maintenance, marketing, support, and management.

This curriculum is more advanced than other, apparently similar, curricula offered in other locations. System-level courses are targeted at PC architecture, advanced network systems, and communications. Programming courses cover modern conventions in software design. Integration-level courses cover system interfacing, circuit theory, communications theory, and specialized integration hardware. The result is a more complete background in computer systems stressing networking and system integration than other curricula. The program is continually updated to reflect the state of the art in this field.

Graduates of this department will continue to assume major roles in a wide variety of professional areas as companies down-size from mainframe systems to distributed networks of smaller computers.

Math, computer, and technical skills all provide a base for career development that often leads to leadership and management positions in the broad field of electronics engineering.

Educational background: Applicants are advised that competency in algebra, trigonometry, and physics is important. Applicants without this background may take the prerequisite courses at STCC, although this may lengthen the time needed to complete the degree program.

Students wishing to further their education in an engineering field should notify their STCC academic advisor early in their course of study so that arrangements can be made to facilitate the transfer process.

Minimum Grade Requirements: Students in Computer Systems Engineering Technology must receive a grade of "D" or better. A QPA of 2.0 must be achieved for graduation. Upon the successful completion of requirements for this program, as listed below, the degree of **Associate in Science in Computer Systems Engineering Technology** will be awarded.

SEMESTER 1

No.	Course Title	Class	Lab	Credits
ESET-111	Intro. to Comp.-Aided Engin. Tech. *(or)*			
CSET-111	Intro. to Programming	3		3
ESET-141	Electric Circuits	4		4
ESET-145	Electric Circuits Lab		3	1
CSET-210	Introduction to Computers	2	3	3
ENGL-100	English Composition 1	3		3
MATH-132	Technical Math 1	4		4
LEOT-090	Laser and Lab Safety	1		1*
		17	6	18

* Below college level; does not carry graduation credit.

SEMESTER 2				
ESET-260	Digital Systems	3		3
ESET-265	Digital Systems Lab		3	1
TCOM-330	Telecom Electronics	3	3	4
ESET-150	Test and Measurement	1		1
LEOT-150	Introduction to Photonics	1		1
TCOM-150	Introduction to Telecommunications	1		1
MATH-232	Technical Math 2	4		4
	Elective: Social Science	3		3
		16	6	18
SEMESTER 3				
CSET-345	Operating Systems 1	3	3	4
CSET-344	Computer Programming	3	3	4
CSCO-170	Cisco Networking 1	3	3	4
PHYS-119	Technical Physics	4	2	4
		12	12	16
SEMESTER 4				
CSET-452	Computer Systems	3	3	4
CSET-445	Operating Systems 2	3	3	4
CSCO-270	Cisco Networking 2	3	3	4
ENGL-200	English Comp. 2: Intro. to Lit. *(or)*			
SPCH-203	Fundamentals of Speech *(or)*			
WRIT-202	Technical Report Writing	3		3
		12	9	15

NOTE: MATH-132 and MATH-232 must be completed and passed by the start of the third semester.

Digital Media Production

Associate Degree Program TPRD.AS

This program is designed to prepare students for careers in the diverse forms of teleproduction and multimedia, which include graphic arts, video production, sound designing, typography, desktop computer operating systems, digital video editing, image quality control, story and narration writing, animation, directing, and design of user-interactive programs for CD-ROM and Internet distribution.

All students in the department take the same set of courses in the first semester. From this experience, students may choose to take either the Teleproduction or the Multimedia set of courses as an option within the department.

The Teleproduction option emphasizes technical and creative preparation for production of video for broadcast and cablecast, as well as industrial, medical, and promotional videos.

The Multimedia option emphasizes graphic arts skills, computer-based designs, technical prep for digital distribution methods, plus the design and implementation of user-interactivity in multimedia products.

Minimum Grade Requirement: The average of all courses taken in the Teleproduction and Muiltimedia major must be 2.0 (C).

Upon successful completion of the requirements for this program, the degree of **Associate in Science in Teleproduction and Multimedia Technology** will be awarded.

CORE CURRICULUM FOR BOTH OPTIONS

SEMESTER 1

No.	Course Title	Class	Lab	Credits
CMPA-103	Microcomputer Applications for Windows	3		3
ENGL-100	English Composition 1	3		3
TPRD-100	Introduction to Multimedia	3		3
TPRD-125	Intro. to Video Production	3	3	4
TPRD-140	Intro. to Mass Communication	3		3
		15	3	16

TELEPRODUCTION TECHNOLOGY — TPRD.AS
OPTION TO DIGITAL MEDIA PRODUCTION

Develops a working knowledge of the operation and capabilities of professional video equipment through classes and studio video projects, skill in the writing and directing of informational and dramatic videos, and practice in the production of live news shows. The emphasis is on applying production skills to the challenge of engaging audience attention to video presentations.

SEMESTER 2

TPRD-112	Writing for Electronic Media	3		3
TPRD-230	Speaking onTelevision	3		3
TPRD-240	Film Structure and Analysis	3		3
TPRD-310	Advanced Video Production	2	3	3
SOCL-100	Introduction to Sociology	3		3
		14	3	15

SEMESTER 3

TPRD-210	Advanced TV Writing	3		3
TPRD-350	Advanced Digital Video Editing	2	3	3
TPRD-322	Television Journalism	3		3
TPRD-331	Television Practicum (or elective)		6	2
PSYC-100	General Psychology	3		3
ENGL-200	English Comp. 2: Intro. to Lit.	3		3
		14	9	17

SEMESTER 4

TPRD-220	Digital Film Making	2	3	3
TPRD-422	TV News Production	1	6	3
TPRD-440	Digital Video Portfolio	3		3
PHYS-125	Physical Science	3	3	4
	Elective: General Education	3		3
		12	12	16

MULTIMEDIA TECHNOLOGY **MLTD.AS**
OPTION TO DIGITAL MEDIA PRODUCTION

The purpose of multimedia is to take various media (such as sound, text, image, motion, music, story-line) into the computer realm where they can be combined so as to be interactive with the user. The methods for doing this, and the design factors for effective use, are the central focus of the multimedia option.

SEMESTER 2

GRPH-125	Typography/Layout Principles	2	3	3
TPRD-200	Internet Multimedia	3		3
ARTS-146	Introduction to Art: Basic Design	2	3	3
ENGL-200	English Composition 2: Intro. to Lit.	3		3
	Elective: General Education	3		3
		13	6	15

SEMESTER 3

TPRD-350	Advanced Digital Video Editing	2	3	3
TPRD-352	Digital Sound and Video Design	3		3
TPRD-451	Interactive Multimedia Design	2	3	3
PHYS-256	Optics and Image Recording	3	3	4
	Elective: Social Science	3		3
		13	9	16

SEMESTER 4

TPRD-351	Visual Quality and Aesthetics	3	3	3
TPRD-452	Multimedia Interactive Authoring	2	3	3
TPRD-453	Digital Animation	2	3	3
ARTS-215	Digital Arts	3	2	3
ARTS-460	Experimental Computer Imaging 2	3	3	4
		13	14	16

Electrical Engineering Technology

Associate Degree Program ELEC.AS

The Electrical Engineering Technology program prepares students for work in the development, installation and maintenance of robotic and industrial automated systems.

The field of robotics and automation is concerned with automated machines controlled electrically by involving the coordinated use of hydraulics, electrical, pneumatic, and microcomputer elements. An investment in robotics presents many advantages to enterprises, including lower production costs and a quality of work not attainable by a human operator. With this in mind, the need for skilled technicians to install, maintain, and service these automated systems will be ever-increasing.

Minimum grade requirements: All "ELEC" series electrical technology courses must be successfully completed with a grade of "D" or better to graduate. These courses must be taken in sequential order. That is, second semester courses cannot be taken until the first semester prerequisite courses are successfully completed. Before starting the third semester, the student must have successfully completed MATH-232, Technical Mathematics 2.

Upon the successful completion of requirements for this program as listed below. the degree of **Associate in Science in Electrical Engineering Technology** will be awarded.

SEMESTER 1

No.	Course Title	Class	Lab	Credits
ENGL-100	English Composition 1	3		3
ELEC-110	Basic Electricity 1	2	3	3
ELEC-121	CAD for Automation	3		3
ELEC-140	Programming for Microcomputers	2	3	3
MATH-132	Technical Math 1	4		4
	Elective: Social Science	3		3
		17	6	19

SEMESTER 2

ELEC-210	Basic Electricity 2	2	3	3
MATH-232	Technical Math 2	4		4
ELEC-241	Fundamentals of Motor Control	2	3	3
ELEC-340	Fundamentals of Robotics	2	3	3
ELEC-260	Fluid Power Technology	3		3
		13	9	16

SEMESTER 3

ELEC-320	Industrial Electronics 1	2	3	3
ELEC-350	Programmable Motor Control	2	3	3
WRIT-202	Technical Report Writing	3		3
ELEC-331	Control System Theory 1	4		4
ELEC-480	Robotics and Automated Systems	2	3	3
		13	9	16

SEMESTER 4

ELEC-441	Senior Project	2	2	3
ELEC-411	Industrial Electronics 2	2	3	3
ELEC-451	Microprocessor Applications	2	3	3
SPCH-203	Fundamentals of Speech	3		3
ELEC-431	Control Systems Theory 2	2	3	3
	Elective: Humanities/Soc. Sci.	3		3
		14	11	18

ELECTRICAL/ROBOTICS TECHNOLOGY **EROB.COC**
Certificate of Completion program

SEMESTER 1

No.	Course Title	Class	Lab	Credits
ELEC-110	Basic Electricity 1	2	3	3
ELEC-121	CAD for Automation	3		3
ELEC-140	Programming for Microcomputers	2	3	3
ENGL-100	English Composition 1	3		3
MATH-132	Technical Math 1	4		4
		14	6	16

SEMESTER 2

ELEC-210	Basic Electricity 2	2	3	3
ELEC-241	Fundamentals of Motor Control	2	3	3
ELEC-340	Robotics 1	2	3	3
ELEC-260	Fluid Power Technology	3		3
		9	9	12

Note: It is recommended that students enroll in WRIT-202 Technical Report Writing if possible.

Upon the successful completion of requirements for this program, a **Certificate of Completion** in **Electrical/Robotics Technology** from STCC will be awarded.

Electronic Systems Engineering Technology ESET.AS

Associate Degree Program

Electronic Systems Engineering Technology is a continually expanding field offering exciting careers in electronic system design, manufacturing, maintenance, marketing, support, and management. Graduates have assumed major roles in a wide variety of professional areas. Some of these areas include communications, control systems, circuit design, system design, systems testing, computer system

design, medical systems, and materials testing. As the country designs, upgrades, replaces and maintains the vast communications highway, most of the work will be done by electronics technicians.

Math, computer and technical skills all provide a base for career development that often leads to leadership and management positions in the broad field of electronics engineering.

Educational background: Applicants are advised that competency in algebra, trigonometry, and physics is important. Applicants without this background may take the prerequisite courses at STCC although this may lengthen the time needed to complete the degree program.

Students wishing to further their education in an engineering field should notify their STCC academic advisor early in their course of study so that arrangements can be made to facilitate the transfer process.

Minimum Grade Requirement: Students in Electronic Systems Engineering Technology must receive a grade of "D" or better. A QPA of 2.0 must be achieved for graduation. Upon the successful completion of the requirements for this program, as listed below, the degree of **Associate in Science in Electronic Systems Engineering Technology** will be awarded.

SEMESTER 1

No.	Course Title	Class	Lab	Credits
ESET-111	Intro. to Computer-Aided Engin. Tech.	2	3	3
ESET-141	Electric Circuits	4		4
ESET-145	Electric Circuits Lab		3	1
CSET-210	Introduction to Computers	2	3	3
MATH-132	Technical Math 1	4		4
ENGL-100	English Composition 1	3		3
LEOT-090	Laser and Lab Safety	1		1*
		16	9	18

SEMESTER 2

ESET-150	Test and Measurement	1		1
ESET-260	Digital Systems	3		3
ESET-265	Digital Systems Lab		3	1
LEOT-150	Introduction to Photonics	1		1
TCOM-150	Introduction to Telecommunications	1		1
TCOM-330	Telecom Electronics	3	3	4
MATH-232	Technical Math 2	4		4
	Elective: Social Sciences	3		3
		16	6	18

SEMESTER 3

ESET-344	Communications Systems 1	3	3	4
ESET-355	Devices, Circuits, and Systems	3	3	4
ESET-370	Data Acquisition and Control	3	3	4
TCOM-430	Lightwave Communication	3	3	4
		15	15	20

SEMESTER 4

ESET-443	Microprocessor Architecture & Systems	3	3	4
ESET-465	Senior Projects in ESET	1	5	3
ENGL-200	English Comp. 2: Intro. to Lit. *(or)*			
SPCH-203	Fundamentals of Speech *(or)*			
WRIT-202	Technical Report Writing	3		3
PHYS-119	Technical Physics *(or)*			
PHYS-130	College Physics *(or)*			
PHYS-132	University Physics *(or)*			
MATH-155	Calculus 1	3	3	4
		10	11	14

* Below college level; does not carry graduation credit

MATH-132 and 232 must be completed and passed by the start of semester 3.

ELECTRONIC SYSTEMS TECHNOLOGY **ESET.COC**
Certificate of Completion program

SEMESTER 1

No.	Course Title	Class	Lab	Credits
ESET-111	Intro. to Computer-Aided Engin. Tech.	2	3	3
CSET-210	Introduction to Computers	2	3	3
LEOT-090	Laser and Lab Safety	1		1*
ENGL-100	English Composition 1	3		3
	Elective: Technical	4		4
		12	6	13

SEMESTER 2

ESET-150	Test and Measurement	1		1
ESET-260	Digital Systems	3		3
ESET-265	Digital Systems Lab		3	1
MATH-132	Technical Math 1	4		4
WRIT-202	Technical Report Writing *(or)*			
	Elective: Social Sciences	3		3
		11	3	12

* Below college level; does not carry graduation credit

Upon the successful completion of the requirements for this program, a **Certificate of Completion** in **Electronic Systems Technology** from STCC will be awarded.

Energy Systems Technology ENGY.AS

Associate Degree Program

The Energy Systems Program is unique in the sense that it is the only such program offered on the East Coast. An up-to-date, extensive laboratory facility has been created which utilizes the latest in equipment and control devices.

Seniors who complete all course requirements are awarded the Associate in Science degree. They are given the opportunity to earn additional awards by taking

the Oil Burner Technician and Stationary Fireman's license examinations as directed by the Massachusetts Department of Public Safety, and the EPA Technician Certification.

The Energy Systems graduate is well prepared to enter an industry that offers career positions as manufacturers' representatives, service engineers, sales engineers, estimators, independent businessmen, lab technicians, and power plant operators.

Minimum Grade Requirement: Students must achieve a "D" as the minimum passing grade in all ENGY series technical courses. A student must have earned a minimum QPA of 2.0 for graduation. Upon the successful completion of requirements for this program, as listed below, the degree of **Associate in Science in Energy Systems Technology** will be awarded.

SEMESTER 1

No.	Course Title	Class	Lab	Credits
ENGL-100	English Composition 1	3		3
PSYC-100	General Psychology	3		3
ENGY-110	Theory of Controls	3		3
ENGY-120	Energy Systems Lab 1	1	3	2
MECH-170	Fundamentals of AutoCAD	2	3	3
MATH-117	Contemporary Math Applications	3		3
		15	6	17

SEMESTER 2

SPCH-203	Fundamentals of Speech	3		3
ENGY-220	Combustion Control Cir.	3		3
ENGY-230	Energy Systems Lab 2	1	3	2
CMPA-103	Microcomputer Applications for Windows	3		3
	Elective: Social Science	3		3
		13	3	14

SEMESTER 3

CHEM-101	Survey of Chemistry 1	3	3	4
ENGY-240	Principles of Refrigeration	2	3	3
ENGY-330	Power Plant Operation 1	3		3
ENGY-350	Microprocessor Controls	2	3	3
ENGY-320	Heating System Design	3		3
		13	9	16

SEMESTER 4

WRIT-202	Tech. Report Writing	3		3
ENGY-340	Fund. of Air Conditioning	2	2	3
ENGY-435	HVAC Electrical Apps.	3		3
ENGY-425	Building Management Systems	3	3	4
ENGY-411	Advanced Heating System Design	4		4
		15	5	17

HEATING/VENTILATION/AIR CONDITIONING **ENGY.COC**
Certificate of Completion program

This program prepares individuals for employment in entry-level positions in the heating and air conditioning industry. Fundamentals of oil burner and air conditioning maintenance, repair, and installation are the focus of this program.

Students are given the opportunity to earn additional awards by taking the Certificate of Competency and Stationary Fireman's examinations as directed by the Mass. Department of Public Safety, and the EPA Technician certification. Students who complete the required course of study are prepared for employment in one of the following occupations: heating systems technician, refrigeration technician, power plant operator, and electrical controls troubleshooter.

SEMESTER 1

No.	Course Title	Class	Lab	Credits
ENGY-110	Theory of Controls	3		3
ENGY-120	Energy Systems Lab 1	1	3	2
ENGY-240	Principles of Refrigeration	2	3	3
ENGY-330	Power Plant Operation 1	3		3
ENGY-320	Heating System Design	3		3
		12	6	14

SEMESTER 2

ENGY-220	Combustion Control Circuits	3		3
ENGY-230	Energy Systems Lab 2	1	3	2
ENGY-340	Fundamentals of Air Conditioning	2	2	3
ENGY-435	HVAC Electrical Apps	3		3
		9	5	11

Upon successful completion of the requirements for this program, a **Certificate of Completion** in **Heating/Ventilation/Air Conditioning** from STCC will be awarded.

Fire Protection and Safety Technology

Associate Degree Program FIRE.AS

Core courses for an associate degree program in Fire Protection and Safety Technology as well as a certificate of completion program in Fire Science are offered during the evening hours at the Chicopee Fire Training Center. The first class session is held on campus. Graduates of this associate degree program will be able to enter the Salem State College Fire Science bachelor's degree program through an articulation agreement between the colleges.

No.	Course Title	Credits
ENGL-100	English Composition 1	3
ENGL-200	English Composition 2	3
CHEM-101	Survey of Chemistry 1	4
FIRE-125	Fire Protection and Fire Prevention	4
FIRE-210	Building Construction	3
FIRE-220	Organization and Management	3
FIRE-310	Fire Hydraulics and Equipment	3
FIRE-330	Fire Protection Systems	3
FIRE-340	Fire Officership	3
FIRE-410	Hazardous Materials	3
FIRE-420	Fire Causes and Detection	3
FIRE-430	Advanced Protection Systems	3
MATH-117	Contemporary Math Applications	3
PHYS-130	College Physics 1	3
PSYC-100	General Psychology *(or)*	
SOCL-100	Introducfion to Sociology	3
	General Elective	3
	General Elective	3
	General Elective	3
	General Elective	3
		59

General electives include the following:

CMPA-103	Microcomputer Applications for Windows
SPCH-203	Fundamentals of Speech
ECON-100	Principles of Economics 1
HIST-100	Survey of Early U.S. History
PSYC-100	General Psychology
MANG-110	Principles of Management
ENGL-302	American Literature 1620-1860
HIST-100	Survey of Western Civilization
PSCI-100	American Government and Politics

See technologies counselor for additional electives

Upon successful completion of the requirements for this program, the degree of **Associate in Science** in **Fire Protection and Safety Technology** will be awarded.

FIRE SCIENCE
Certificate of Completion Program **FIRE.COC**

This certificate of completion program is designed to provide professional training for students in careers as technicians in fire protection and safety agencies. Careers include opportunities in municipal, state and federal agencies, as well as insurance companies and industries. This program is designed to meet the needs of potential and in-service firefighters by providing practical and technical instruction to those who will be serving the greater Pioneer Valley and Connecticut Valley communities.

No.	Course Title	Credits
ENGL-100	English Composition 1	3
FIRE-125	Fire Protection and Fire Prevention	4
FIRE-210	Building Construction (Fire)	3
FIRE-220	Organization and Management (Fire)	3
FIRE-330	Fire Protection Systems	3
FIRE-340	Fire Officership	3
FIRE-420	Fire Causes and Detection (Arson 1)	3
FIRE-430	Advanced Protection Systems	3
		25

Graphic Arts Technology GRPH.AS

Associate Degree Program

The Graphic Arts Department offers a curriculum designed to prepare students for careers in printing, publishing, advertising, and commercial photography. The program courses cover a wide cross section of imaging technologies, from traditional printing and print preparation techniques through the latest digital processes, including studio-based digital photography. They combine a strong theoretical foundation with hands-on laboratory experiences in practical application.

An associate degree in Graphic Arts Technology will provide the education necessary to begin a successful career in the graphic arts industry, as well as many of the diverse emerging imaging technologies such as the Internet. Rochester Institute of Technology, as well as other institutions offering programs in the various imaging technologies, accept credits from the STCC Graphic Arts Technology program toward their degree programs. The program offers two options, Commercial Art and Digital Photography, as well as two Certificates of Completion in Desktop Publishing and Graphic Arts Technology.

Minimum Grade Requirement: The minimum passing grade for any individual course in this program shall be a "D" (60%). The minimum average for graduation from the program is a "C" (73%).

Upon the successful completion of requirements for this program, as listed below, the degree of **Associate in Science in Graphic Arts Technology** will be awarded.

CORE CURRICULUM FOR BOTH OPTIONS

SEMESTER 1

No.	Course Title	Class	Lab	Credits
GRPH-125	Typography and Layout	2	3	3
GRPH-145	Intro. to the Graphic Arts Computer	2	3	3
GRPH-180	Professional Digital Photography	2	3	3
ARTS-346	History of Modern Art	3		3
ENGL-100	English Composition 1	3		3
		12	9	15

COMMERCIAL ART **CART.AS**
OPTION TO GRAPHIC ARTS TECHNOLOGY

This option prepares students for careers in image preparation for commercial printing or entry level into advertising agencies and commercial art studios. Students will develop proficiencies in various imaging technologies using the latest professional software programs and digital technologies. Courses in typography, layout, graphic design, portfolio presentation, color management, prepress, and printing technology are included in the program.

SEMESTER 2

GRPH-122	Introduction to Prepress	2	3	3
GRPH-131	Printing Technology	3		3
GRPH-455	Macintosh Operating Systems	3		3
GRPH-462	Digital Image Preparation	2	3	3
MATH-117	Contemporary Math Applications*	3		3
	Elective: English *(Note 1)*	3		3
		16	6	18

SEMESTER 3

GRPH-222	Image Assembly	2	3	3
GRPH-420	Color Reproduction Processes	2	3	3
GRPH-463	Digital Illustration	2	3	3
PHYS-256	Optics and Image Recording	3	3	4
	Elective: Social Science	3		3
		12	12	16

SEMESTER 4

GRPH-360	Offset Presswork	2	3	3
GRPH-422	Color Management	2	3	3
GRPH-445	Graphic Arts Portfolio	2	3	3
GRPH-461	Electronic Publication	2	3	3
	Elective: Humanities or Gen. Ed.	3		3
		11	12	15

Note 1: WRIT-202 Technical Report Writing or ENGL-200 English Composition 2

DIGITAL PHOTOGRAPHY **DPHO.AS**
OPTION TO GRAPHIC ARTS TECHNOLOGY

This option prepares students for fast-paced careers in commercial studio photography, including portrait photography, product photography, digital image modification, photo restoration, photo retouching, digital work flow, and image preparation for final output. The student will also develop proficiencies in various lighting and image capture techniques, as well as skills with professional imaging software programs. Courses in typography, layout, graphic design, and website design, including HTML and interactive media techniques, are also included in the program.

SEMESTER 2				
GRPH-200	Website Design and Development	2	3	3
GRPH-280	Advanced Digital Photography	2	3	3
GRPH-455	Macintosh Operating Systems	3		3
GRPH-462	Digital Image Preparation	2	3	3
	Elective: English *(Note 1)*	3		3
MATH-117	Contemporary Math Applications	3		3
		15	9	18
SEMESTER 3				
GRPH-420	Color Reproduction Processes	2	3	3
GRPH-463	Digital Illustration Techniques	2	3	3
GRPH-281	Advertising Photography	2	3	3
GRPH-282	Professional Digital Imaging Tech.	2	3	3
PHYS-256	Optics and Image Recording	3	3	4
		11	15	16
SEMESTER 4				
GRPH-201	Interactive Media Design	2	3	3
GRPH-422	Color Management	2	3	3
GRPH-461	Electronic Publication	2	3	3
GRPH-283	Photographic Illustration	2	3	3
	Elective: Social Sciences	3		3
	Elective: Humanities or Gen. Ed.	3		3
		14	12	18

Note 1: WRIT-202 Technical Report Writing or ENGL-200 English Composition 2

GRAPHIC ARTS TECHNOLOGY **GRPH.COC**
Certificate of Completion program

SEMESTER 1

No.	Course Title	Class	Lab	Credits
GRPH-122	Introduction to Prepress	2	3	3
GRPG-125	Typography and Layout	2	3	3
GRPH-131	Printing Technology	3		3
GRPH-145	Intro. to the Graphic Arts Computer	2	3	3
ENGL-100	English Composition 1	3		3
		12	9	15
SEMESTER 2				
GRPH-422	Prepress Imaging	2	3	3
GRPH-461	Electronic Publication	2	3	3
GRPH-462	Digital Imaging Preparation	2	3	3
	Elective: Mathematics	3		3
		9	9	12

Upon the successful completion of the requirements for this program, a **Certificate of Completion** in **Graphic Arts Technology** from STCC will be awarded.

DESKTOP PUBLISHING **DPUB.COC**
Certificate of Completion program

SEMESTER 1

No.	Course Title	Class	Lab	Credits
GRPH-125	Typography and Layout	2	3	3
GRPH-131	Printing Technology	3		3
GRPH-145	Introduction to the Graphic Arts Computer	2	3	3
	Elective: Departmental	3		3
		10	6	12

SEMESTER 2

GRPH-455	Macintosh Operating Systems	3		3
GRPH-461	Electronic Publication	2	3	3
GRPH-462	Digital Imaging Preparation	2	3	3
	Elective: Departmental *(or)*			
	Elective: General Education	3		3
	Elective: Departmental *(or)*			
	Elective: General Education	3		3
		13	6	15

Departmental/General electives must be taken from the following:

GRPH-122	Introduction to Prepress	(3 credits)
GRPH-420	Color Reproduction Processes	(3 credits)
GRPH-425	Color Reproduction	(4 credits)
GRPH-422	Color Management	(3 credits)
GRPH-445	Graphic Arts Portfolio Workshop	(3 credits)
GRPH-463	Digital Illustration Techniques	(3 credits)
CMPA-103	Microcomputer Applications for Windows	(3 credits)
ARTS-360	Experimental Computer Imaging	(4 credits)

Upon the successful completion of the requirements for this program, a **Certificate of Completion** in **Desktop Publishing** from STCC will be awarded.

Landscape Design and Management Technology LAND.AS

Associate Degree Program

The rapidly-expanding and challenging field of landscape design and management technology encompasses the principles of stewardship of both the natural and man-made environments. It requires trained technicians to design, build, and manage a wide range of landscapes, from individual homes to condominiums, from neighborhood parks to golf courses, from downtown restorations to national

historic landmarks, as well as training technicians for commercial horticultural applications. STCC's Landscape Design and Management program is designed to introduce the student to this wide world of landscape possibilities. The program builds on a solid foundation of basic courses that cover the field of plant growth, identification, care and maintenance. The student will also develop, through a series of studio courses, landscape design and construction skills. Alumni have traditionally had a wide choice of employment opportunities including landscape designer, contractor, maintainer, golf course maintainer, plant production nursery or greenhouse operator, interior plant specialist, and garden center assistant. Many alumni have also continued their education in landscape architecture or horticulture at the university level. STCC's program participates in the joint admission program with UMass, providing participating students with a quality first two years of education at a cost savings.

Minimum Grade Requirement: All Landscape Technology courses shall be completed with a grade of "D" (63% or 1.0) or above. Any course failed must be repeated before graduation and each course may be repeated only once. The student must also have achieved a 2.0 QPA and shall have remained in good academic standing as outlined in general college policy.

Upon the successful completion of requirements for this program, as listed below, the degree of **Associate in Science in Landscape Design and Management Technology** will be awarded.

SEMESTER 1

No.	Course Title	Class	Lab	Credits
CMPA-103	Microcomputer Applications for Windows	3		3
ENGL-100	English Composition 1	3		3
MATH-117	Contemporary Math Applications	3		3
LAND-111	Trees in the Landscape	3	3	4
LAND-120	Prin. of Horticulture	2	3	3
		14	6	16

SEMESTER 2

ENGL-200	Comp. 2: Intro. to Lit.	3		3
LAND-210	Presentation Techniques		6	3
BIOL-108	General Botany	3	3	4
LAND-220	Turf Management	2	3	3
	Elective: Social Science *(or)* Elective: Humanities	3		3
		11	12	16

SEMESTER 3

LAND-311	Shrubs in the Landscape	3	3	4
LAND-320	Landscape Practices	2	3	3
LAND-330	Landscape Design 1	1	4	3
LAND-350	Landscape Operations (Plant)	2	3	3
SPCH-203	Fundamentals of Speech	3		3
	Elective: Social Sciences	3		3
		14	13	19

SEMESTER 4

LAND-410	Plant Propagation	2	3	3
LAND-420	Landscape Design 2	1	4	3
LAND-431	Earth Forms & Structures	3	3	4
SMBE-421	Small Business Formation *(or)*			
LAND-197	Landscape Co-op	3		3
LAND-450	Entomology/Disease Control	2	3	3
		11	13	16

TRANSFER COMPACT **LANT.AS**

OPTION TO LANDSCAPE DESIGN AND MANAGEMENT TECHNOLOGY

In addition to our associate degree in Landscape Design and Management Technology, the department offers an associate degree course of study with a Transfer Compact option. This option is for the student who plans to attend the University of Massachusetts or any other four-year institution upon graduation from STCC. In addition to offering many of the core Landscape courses, this program provides the general education courses needed to allow the student to transfer into the University of Massachusetts or similar colleges as a junior, thus providing the student with both cost and time savings.

Minimum grade requirements: All courses in this option must be completed with a grade of "C" or above for transfer consideration of the grade. Any course failed must be repeated before graduation, and each course may be repeated only once. In addition, the student must have achieved at least a 2.0 QPA and shall have remained in good academic standing, as outlined in the general college policy.

Upon successful completion of requirements for this program, as listed below, the degree of **Associate in Science in Landscape Design and Management Technology, Transfer Compact Option**, will be awarded.

SEMESTER 1

No.	Course Title	Class	Lab	Credits
LAND-111	Trees in the Landscape	3	3	4
LAND-120	Principles of Horticulture	2	3	3
CMPA-103	Microcomputer Applications for Windows	3		3
ENGL-100	English Composition 1	3		3
MATH-117	Contemporary Math Applications *	3		3
		14	6	16

* or higher level math

SEMESTER 2				
LAND-210	Presentation Techniques		6	3
LAND-220	Turf Management	2	3	3
ENGL-200	English Comp. 2: Intro. to Lit.	3		3
BIOL-108	General Botany	3	3	4
	Elective: Social Sciences	3		3
		11	12	16
SEMESTER 3				
LAND-311	Shrubs in the Landscape	3	3	4
LAND-330	Landscape Design 1	1	4	3
	Elective: Humanities *(Note 2)*	3		3
	Elective: Humanities *(Note 2)*	3		3
	Elective: Humanities *(Note 2)*	3		3
	Elective: Social Science *(Note 1)*	3		3
		16	7	19
SEMESTER 4				
LAND-410	Plant Propagation *(or)*			
LAND-420	Landscape Design 2	1	4	3
LAND-431	Earth Forms and Structures	3	3	4
LAND-450	Entomology/Disease Control	2	3	3
	Elective: Social Science *(Note 1)*	3		3
	Elective: Lab Science	3	3	4
		12	13	17

Note 1: Social Science electives include: psychology, sociology, anthropology, political science, economics, history

Note 2: Humanities electives include: art, theater, foreign language, music, philosophy, literature

LANDSCAPE DESIGN AND MANAGEMENT **LAND.COC**
Certificate of Completion program

SEMESTER 1

No.	Course Title	Class	Lab	Credits
LAND-111	Trees in the Landscape	3	3	4
LAND-120	Principles of Horticulture	2	3	3
CMPA-103	Microcomputer Applications for Windows	3		3
ENGL-100	English Composition 1	3		3
		11	6	13

SEMESTER 2

SMBE-421	Small Business Formation *(or)*			
LAND-197	Landscape Co-Op	3		3
LAND-210	Presentation Techniques		6	3
LAND-220	Turf Management	2	3	3
LAND-410	Plant Propagation	2	3	3
BIOL-108	General Botany	3	3	4
		10	15	16

Upon the successful completion of the requirements for this program, a **Certificate of Completion** in **Landscape Design and Management** from STCC will be awarded.

Laser Electro-Optics Technology

Associate Degree Program LEOT.AS

Laser Electro-Optics Technology is one of the more rapidly growing technical fields in America today. The trained technician can expect favorable job opportunities, promotion potential and rapid advancement. STCC's program is designed to expose the student to four major areas: Laser Systems, Electronics, Optics and Electro-Optics.

The student will learn about the laser both as an instrument and as an integral part of a system designed for industrial, medical and scientific application. The electronics used in generating and controlling the laser will be taught. The use of the laser in electronics production, testing, maintenance, research and development, is part of the curriculum.

In the field of optics, the student will acquire a good working knowledge of light, geometrical and physical optics, optical components and optical systems.

Finally, the student will devote a large portion of time incorporating optical and laser skills and knowledge into developing electro-optics techniques and systems.

Educational background: Applicants are advised that competency in algebra, trigonometry, and physics is important. Applicants without this background may take the prerequisite courses at STCC, although this may lengthen the time needed to complete the degree program.

Students wishing to further their education in an engineering field should notify their STCC academic advisor early in their course of study so that arrangements can be made to facilitate the transfer process.

Minimum Grade Requirement: Students must receive a grade of "D" or better. A QPA of 2.0 must be achieved for graduation.

Upon the successful completion of requirements for this program, as listed below. the **Associate in Science Degree in Laser Electro-Optics Technology** will be awarded.

SEMESTER 1

No.	Course Title	Class	Lab	Credits
ESET-111	Intro. to Computer-Aided Engin. Tech.	2	3	3
ESET-141	Electric Circuits	4		4
ESET-145	Electric Circuits Lab		3	1
CSET-210	Introduction to Computers	2	3	3
ENGL-100	English Composition 1	3		3
MATH-132	Technical Math 1	4		4
LEOT-090	Laser and Lab Safety	1		1*
		16	9	18

SEMESTER 2

ESET-260	Digital Systems	3		3
ESET-265	Digital Systems Lab		3	1
TCOM-330	Telecom Electronics	3	3	4
ESET-150	Test and Measurement	1		1
LEOT-150	Introduction to Photonics	1		1
TCOM-150	Introduction to Telecommunications	1		1
MATH-232	Technical Math 2	4		4
	Elective: Social Science	3		3
		16	6	18

SEMESTER 3

LEOT-322	Introduction to Lasers	2	3	3
LEOT-375	Optics	3	3	4
LEOT-349	Fiber-Optic Communications	3	3	4
ESET-355	Devices, Circuits & Systems	3	3	4
WRIT-202	Technical Report Writing	3		3
		14	12	18

SEMESTER 4

LEOT-465	Senior Projects	1	5	3
LEOT-439	Opto-Electronics	3	3	4
LEOT-451	Advanced Topics in Lasers	2	3	3
PHYS-120	Technical Physics for Electronics *(or)*			
CHEM-103	General Chemistry 1	4	3	4
		10	14	14

* Below college level; does not carry graduation credit

Mechanical Engineering Technology

Associate Degree Program MECH.AS

Mechanical Engineering Technology (MET) is the practical application of engineering and scientific principles for the purpose of designing and manufacturing quality products, services, and systems. The majority of the MET's training is centered around using today's high-tech computer hardware and software. These computer skills are complemented with instruction in mathematics, science, and engineering analysis to provide the graduate with the sound foundation essential to implement design and manufacturing solutions.

Today, more than ever, industry is challenged to produce cost-effective, high-quality products at ever-increasing production rates. In order to stay competitive, companies are developing computer-integrated manufacturing systems, implementing concurrent engineering, and certifying to ISO 9000, and are also competing for the Malcolm Baldrige Quality Award. These companies demand highly trained and knowledgeable employees to successfully implement these critical design and manufacturing initiaitives. The associate degree in Mechanical Engineering Technology will give the student a competitive advantage in entering the job market, and will enable industry professionals to obtain the necessary skills to advance within their organizations.

The associate degree in Mechanical Engineering Technology provides the student with a unique combination of theoretical and practical knowledge of today's design and manufacturing processes using CAD, CNC, CAD/CAM integration, and total quality management. Manufacturing engineering technicians must have a sound math and science foundation, possess a working knowledge of materials, exhibit good communications skills, and most of all be skilled in the latest computer technologies.

Using CAD, students learn how to create designs in two- and three-dimensional space, provide documentation according to current professional standards, and provide for seamless integration into computer-aided manufacturing systems. In addition, students are instructed in design for manufacturability, including the necessary design analysis methods required to ensure product function and reliability. During the final semester, the student's career is punctuated with a capstone project. These competitive projects combine design and manufacturing students into small teams whose mission is to research, design, document, and ultimately manufacture a product or implement a system.

Upon successful completion of the requirements as listed below, the degree of **Associate in Science in Mechanical Engineering Technology** will be awarded.

SEMESTER 1

No.	Course Title	Class	Lab	Credits
MECH-115	Introduction to Engineering *(or)*			
	Elective: Technical *(Note 1)*	2	3	3
MECH-150	Fundamentals of CNC	2	3	3
MECH-185	Mechanical CAD 1: 2D Fundamentals	3	3	4
ENGL-100	English Composition 1	3		3
MATH-132	Technical Math 1	4		4
		14	9	17

SEMESTER 2

No.	Course Title	Class	Lab	Credits
MECH-226	Metrology and Geometrics	2	3	3
MECH-280	CAD 2: 3D Fundamentals	3	3	4
MECH-337	CAM 1	2	6	4
MATH-232	Technical Math 2	4		4
WRIT-202	Technical Report Writing	3		3
		14	12	18

SEMESTER 3

MECH-370	Mechanical CAD 3: 3D Design	2	6	4
MECH-390	Materials & Manufacturing Processes	3		3
MECH-437	CAM 2	2	6	4
MECH-442	Manufacturing Planning and Control *(or)*			
	Elective: Technical *(Note 1)*	3		3
	Elective: Science *(Note 2)*	3	3	4
		13	15	18

SEMESTER 4

MECH-324	Statics/Strength of Materials	4		4
MECH-470	Introduction to Pro/Engineer *(or)*			
MECH-327	Quality Concepts	2	3	3
MECH-467	Advanced Engineering Applications *(or)*			
	Elective: Technical *(Note 1)*	2	3	3
	Elective: Humanities/Social Science	3		3
MECH-481	Senior Projects *(or)*			
	Elective: Technical *(Note 1)*	3	3	4
		14	9	17

Note 1: Prior approval of elective is required from the Mechanical Engineering Technology department chair or designee.

Note 2: Students must choose between PHYS-119 Technical Physics, PHYS-130 College Physics, or CHEM-103 General Chemistry 1. See your advisor to discuss transferability of these courses.

COMPUTER-AIDED DRAFTING **CCAD.COC**
Certificate of Completion program

This program prepares the student for an entry-level position as a design detailer using AutoCAD or similar drafting software. Students gain skills in 2D and 3D design and geometric dimensioning. Students who complete the required course of study in CAD are prepared for employment as a computer-aided drafting/ designer, mechanical detailer, 3D designer, or drafting quality assurance examiner.

No.	Course Title	Class	Lab	Credits
MECH-185	Mechanical CAD 1: 2D Fund.	3	3	4
MECH-280	Mechanical CAD 2: 3D Fund.	3	3	4
MECH-226	Metrology and Geometrics	2	3	3
MECH-370	Mechanical CAD 3: 3D Design	3	3	4
MECH-470	Intro. to Pro/Engineer	2	3	3
MECH-467	Advanced Engineering Applications *(or)*			
	Elective: Technical *(Note 1)*	2	3	3
ENGL-100	English Composition 1	3		3
MATH-132	Technical Math 1	4		4
		22	18	28

Note 1: Prior approval of elective is required from the Mechanical Engineering Technology department chair or designee.

Upon successful completion of the requirements for this program, a **Certificate of Completion** in **Computer-Aided Drafting** from STCC will be awarded.

COMPUTER-AIDED MANUFACTURING **CCAM.COC**
Certificate of Completion program

This program prepares the student for an entry-level position as a part programmer using CNC programming software. The student will be able to take a part print, determine the appropriate method for manufacturing, program the part, set up, and run CNC machinery. Students who complete the required course of study in CAM will be prepared for employment as a computer-numeric controlled (CNC) programmer, 3D machining and modeling technician, CNC machine operator, or software integration technician.

No.	Course Title	Class	Lab	Credits
MECH-150	Fundamentals of CNC	2	3	3
MECH-337	Computer-Aided Manufacturing 1	2	6	4
MECH-437	CAM 2	2	6	4
MECH-185	Mechanical CAD 1: 2D Fund.	3	3	4
MECH-280	Mechanical CAD 2: 3D Fund.	3	3	4
ENGL-100	English Composition 1	3		3
MATH-132	Technical Math 1	4		4
		19	21	26

Upon successful completion of the requirements for this program, a **Certificate of Completion in Computer-Aided Manufacturing** from STCC will be awarded.

CAD/CAM **CADM.COC**

Certificate of Completion Program

The CAD/CAM certificate is designed to provide students with basic manufacturing and design skills. This certificate can be completed in one year (two semesters); however, it must be started in the fall semester.

The CAD portion of the CAD/CAM certificate prepares the student for an entry-level position as a design detailer using AutoCAD or similar CAD software. Students gain skills in 2D and 3D part creation including geometrical dimensioning practices. Students who complete this certificate are prepared for employment as entry-level detailers using any CAD system. The CAM portion of the CAD/CAM certificate program prepares the student for an entry-level position in any manufacturing company. The student will be capable of taking a part print, determining the appropriate method for manufacturing, programming the part, then setting up and running a CNC machine. Students will be able to inspect the finished pieces for quality compliance.

Students who complete the required course of study can assume entry-level positions as CNC programmers, CNC machine operators, inspectors, or technical sales representatives. Students also learn the integration of CAD with CAM to obtain a fundamental understanding of how to proceed from the design stage to manufacturing.

SEMESTER 1

No.	Course Title	Class	Lab	Credits
MECH-115	Intro. to Engineering Tech. *(or)* Elective: Technical *(Note 1)*	2	3	3
MECH-150	Fundamentals of CNC	2	3	3
MECH-185	Mechanical CAD 1: 2D Fund.	3	3	4
MATH-132	Technical Math 1	4		4
		11	9	14

SEMESTER 2

MECH-226	Metrology and Geometrics	2	3	3
MECH-280	Mechanical CAD 2: 3D Fund.	3	3	4
MECH-337	Computer-Aided Manufacturing 1	2	6	4
	Elective: Technical *(Note 1)*	2	3	3
		9	15	14

Note 1: Prior approval of elective is required from the Mechanical Engineering Technology department chair or designee

Upon successful completion of the requirements for this program, a **Certificate of Completion** in **CAD/CAM** from STCC will be awarded.

Telecommunications Technology

Associate Degree Program TCOM.AAS

The Telecommunications Technology program prepares students for work in the development, installation, maintenance, and operation of sophisticated telecommunications systems.

Telecommunications is one of the most rapidly-growing high tech fields in America. The Information Age is upon us, and the technology that delivers the information, in voice, data, video, or combinations of these, is telecommunications technology. Increased competition due to federal deregulation and recent developments in the areas of fiber optics, ATM, xDSL, LAN/WAN technology, and wireless technology have made telecommunications technicians highly sought after.

Graduates of this program would work in areas such as research, design, field service, and technical support for telephone companies, Internet service providers, cable and wireless communications companies, and communications equipment manufacturers.

Educational background: Applicants are advised that competency in algebra, trigonometry, and physics is important. Applicants without this background may take the prerequisite courses at STCC although this will lengthen the time needed to complete the degree program.

Students wishing to further their education in an engineering field should notify their STCC academic advisor early in their course of study so that arrangements can be made to facilitate the transfer process.

Minimum Grade Requirement: Students must receive a grade of "D" or better. A QPA of 2.0 must be achieved for graduation.

Upon the successful completion of requirements for this program, as listed below, the degree of **Associate in Applied Science in Telecommunications Technology** will be awarded.

SEMESTER 1

No.	Course Title	Class	Lab	Credits
ESET-111	Intro. to Computer-Aided Engin. Tech.	2	3	3
ESET-141	Electric Circuits	4		4
ESET-145	Electric Circuits Lab		3	1
CSET-210	Introduction to Computers	2	3	3
ENGL-100	English Composition 1	3		3
MATH-132	Technical Math 1	4		4
LEOT-090	Laser and Lab Safety	1		1*
		16	9	18

* Below college level; does not carry graduation credit

SEMESTER 2				
ESET-260	Digital Systems	3		3
ESET-265	Digital Systems Lab		3	1
TCOM-330	Telecom Electronics	3	3	4
ESET-150	Test and Measurement	1		1
LEOT-150	Introduction to Photonics	1		1
TCOM-150	Introduction to Telecommunications	1		1
MATH-232	Technical Math 2	4		4
	Elective: Social Science	3		3
		16	6	18
SUMMER				
TCOM-210	Intro. to Telecom. Networks	2	3	3
SEMESTER 3				
TCOM-315	Physical Layer Telecom Systems	3	3	4
TCOM-430	Lightwave Communication	3	3	4
CSCO-170	Cisco Networking 1	3	3	4
ENGL-200	English Comp. 2: Intro to Lit. *(or)*			
WRIT-202	Technical Report Writing *(or)*			
SPCH-203	Fundamentals of Speech	3		3
		12	9	15
SEMESTER 4				
ESET-360	Mobile/Wireless Networks	3	3	4
TCOM-415	Broadband Telecom. Systems	3	3	4
CSCO-270	Cisco Networking 2	3	3	4
		9	9	12

Note: PHYS-119 Technical Physics is an optional, recommended course, but is not required for graduation.

Upon the successful completion of the requirements for this program, as listed above, the degree of **Associate in Applied Science in Telecommunications Technology** will be awarded.

Health

Students in Diagnostic Medical Imaging - Sonography doing an abdominal ultrasound, looking at the gall bladder, liver, kidneys, and pancreas.

Health Professions

All students applying to School of Health programs must take the college math, English, and reading placement tests. See individual program descriptions in this catalog for additional requirements. It is highly recommended that each applicant contact the Admissions Office or the program chairperson as early as possible for clarification of entrance requirements.

Final acceptance *into the School of Health is conditional upon the submission of all health forms to the college Health Services office and review and acceptance of students by the Dean of Health and the affiliation agency representative.*

Students enrolled in the School of Health, in addition to meeting the general requirements of the college must:

1. meet the terms of the clinical affiliation agreement with the cooperating agencies and
2. meet the technical standards of the program to which they have applied, and
3. meet the specific academic and other requirements of the program of study to which application has been made, and
4. pass, each year of attendance, a Criminal Offender Record Information (CORI) and other checks as required for clinical affiliations or school policies, and
5. adhere to all college and school policies.

Clinical rotations are an integral part of all Health departments. The clinical component is based upon contracts negotiated with area health care facilities, physicians, dentists and educational facilities. Students must complete clinical assignments as required by each program. The clinical rotations are scheduled according to affiliate and program needs. Students may be required to attend clinical rotation during the evening and/or weekends. Summer clinical experience may be required even if not previously designated. The student will be given as much notice as possible in advance of such scheduling.

The terms of the affiliation agreements require each student to:

1. Submit a pre-entrance physical examination and record of immunization completed by a licensed physician to the college Health Service for review by the affiliating agency and the college.

ALL REQUIRED LABORATORY WORK, IMMUNIZATIONS, AND CHEST X-RAYS IN ADDITION TO THE PHYSICAL EXAMINATION MUST BE COMPLETED PRIOR TO THE FIRST DAY OF CLASSES IN THE FIRST SEMESTER. A REPEAT MANTOUX MUST BE DONE BEFORE THE BEGINNING OF THE THIRD SEMESTER. (see Immunization Law)

All students must be immunized for Hepatitis B or have on file in the college Health Services office a statement of declination.

The affiliating agency reserves the right to **refuse** to accept a student for placement who does not meet the Agency standards or who has not been immunized.

2. Carry a malpractice liability insurance policy. The college will arrange for this insurance coverage. The premium is to be paid by the insured student. Limits of coverage are to be determined by the college. Cost to the student is about $15.00 per year. This rate is subject to change without notification.

3. The college requires that all students in the School of Health must wear the college student uniform as set forth by the departments and meet the requirements of the *Professional Dress Code* when on affiliation on or off campus in clinical laboratory settings and at other times as designated by the respective departments. The uniform includes the specified name badge.
4. Abide by the rules and regulations of the cooperating agencies.
5. Assume the cost of transportation to the clinical agencies and other related expenses such as meals, etc.
6. Fulfill the academic and behavioral competencies established by the program, school, and college.
7. As allowed by law, applicants will be required to pass a CORI (Criminal Offender Record Information) and SORI (Sex Offender Record Information) check.

Additional requirements of each Health department are detailed in this catalog.

The college reserves the right to *withdraw* any student at any time from his/her program in Health who cannot be placed in a cooperating agency because of failure of the student to meet or comply with the terms of the affiliation agreement, college or school policy, and/or achieve the behavioral objectives/competencies of the educative event(s).

Some programs, in order to meet the hour requirements of their accrediting agency, have intersession and/or summer sessions in addition to the regular college semester. Students will *be charged for intersession and/or summer sessions at the regular School of Continuing Education rate.* This is in addition to the regular college tuition which covers the semester course of study.

Continuation in Health Professions

The Dean of the School of Health may suspend or withdraw any student who does not meet the standards/expectations of a program of study, or who fails to adhere to college, school, or program policies.

Interdisciplinary Health Studies INTS

This department provides exploration of health fields. If you are thinking of entering a health field, this is the best first step. During exploration, essential skills for college success are obtained, such as critical thinking, communication, study strategies, and computer use. A variety of courses are offered, some over the Internet. Some courses will also fulfill general education elective requirements. Available courses are listed in the course description section of this catalog.

Clinical Laboratory Science CLLS.AS

Associate Degree Program

This program offers an integrated curriculum which provides the students with a background in general education and the skills necessary to function in a clinical laboratory science field and prepares them at career entry level. Fundamentals in clinical waste management, OSHA regulations, clinical microscopy, urinalysis, microbiology, hematology, immunohematology, immunology, and clinical chemistry comprise the core curriculum. Practical clinical experience is obtained in a clinical laboratory with which the college has a contractual agreement. The clinical experience may not be sequential, but by arrangements, according to available clinical resources. In order to matriculate, students must:

1.) Have achieved a minimum passing grade of "C" (75) in all Clinical Laboratory courses (departmental) and

2.) Have passed all courses within the given semester. A minimum QPA of 2.0 must be maintained to remain within the department. Failed CLLS department courses and a QPA of less than 2.0 will result in the student being withdrawn from the department. The student must then reapply to the department for admission; this may be done only once.

3.) All health requirements of the college, the School of Health and the CLLS department must be satisfied.

Applicants must have completed a college preparatory course in high school which included biology, chemistry with labs, and mathematics. Students must place at ENGL-100 and ALGB-097 (Algebra 2) on the STCC English and math placement tests before registration in this program for certain courses. The ALGB-097 may be taken during the first semester or prior to CHEM-101 Survey of Chemistry and STAT-142 Statistics.

Graduates of the program are eligible for national certification by successfully passing a computerized adaptive examination given by a certifying agency. All accepted students must undergo a Criminal Offender Record Information or other check. Depending on the findings, the student may not be allowed to continue in the program of study.

Clinical laboratory practicum includes an intersession, spring and summer session which may not be sequential to the academic program, depending on availability of placement. The first practicum starts during the intersession period in the second year of study. Students must be mindful that placement will require travel and that they are responsible for their own transportation and maintenance.

This program is accredited by the National Accrediting Agency for Clinical Laboratory Sciences, 8410 W. Bryn Mawr Avenue, Suite 670, Chicago, IL 60631-3415, phone (773) 714-8880.

Upon successful completion of the program requirements as listed below, the degree of **Associate in Science in Clinical Laboratory Science** will be awarded.

SEMESTER 1

No.	Course Title	Class	Lab	Credits
CLLS-101	Introduction to Clinical Lab	3	2	4
CLLS-103	Medical Lab. Safety *(5 wks 3-0-1)*	1		1
CMPA-103	Microcomp. Applications for Windows	3		3
ENGL-100	English Composition 1	3		3
BIOL-148	Basics of Anatomy & Physiology *(or)*	3	2	4
BIOL-132	Anatomy & Physiology 1 *(Note 1)*			
		13	4	15

SEMESTER 2

CLLS-212	Medical Microbiology 1	3	4	5
CLLS-300	Hematology and Coagulation	3	2	4
CHEM-101	Survey of Chemistry 1	3	3	4
STAT-142	Statistics	3		3
		12	9	16

SUMMER

ENGL-200	English Comp. 2: Intro. to Literature	3		3
	Elective: Social Science	3		3
		6		6

SEMESTER 3

CLLS-302	Clinical Chemistry	3	3	4
CLLS-311	Medical Microbiology 2	2	3	3
CLLS-412	Immunology *(7 weeks)*	2	4	2
BIOL-140	Biochemistry	3		3
CHEM-355	Instrumentation for CLS *(7 wks 2-3-2)*	1	1.5	2
		11	11.5	14

INTERSESSION

CLLS-420	Clinical Practicum 1 *(2 wks 0-40-1)*		5	1

SEMESTER 4

CLLS-315	Immunohematology	1	2	2
CLLS-421	Clinical Practicum 2		32	6
CLLS-440	Clinical Laboratory Seminar	2		2
		3	34	10

SUMMER

CLLS-422	Clinical Practicum 3 *(7 wks 0-40-3)*		20	3

Note 1: For students planning to continue on for a four-year degree, BIOL-132 and BIOL-232 are required. These students should add BIOL-232 in a subsequent semester.

CLINICAL LABORATORY ASSISTANT **CLLS.COC**
Certificate of Completion program

With the changes in laboratory medicine and the economy, there is a need for a one-year assistant program with phlebotomy to meet the needs of the future. This program may be taken by other allied health professionals for multiskilling, or by individuals who want a career ladder. Individuals who complete this program may articulate into the two-year Clinical Laboratory Science program or take the phlebotomy certification exam.

Individuals applying for this program should have completed high school chemistry and biology. Students must place in ENGL-100 and ARTH-078 or higher on the STCC English and math placement tests before registering for the first semester courses. An applicant must be a high school graduate or the equivalent. All accepted students must undergo a Criminal Offender Record Information or other check. Depending on the findings, the student may not be allowed to continue in the program of study.

SEMESTER 1

No.	Course Title	Class	Lab	Credits
CLLS-103	Medical Laboratory Safety *(5 wks 3-0-1)*	1		1
CLLS-140	Clinical Lab Assistant Skills 1	3	2	4
CLLS-150	Clinical Experience 1 *(10 wks 0-6-1)*		4	1
ENGL-100	English Composition 1	3		3
BIOL-148	Basics of Anatomy & Physiology	3	2	4
MAST-101	Medical Terminology	3		3
		15	8	16

SEMESTER 2

MAST-215	Electrocardiography *(7 wks 1-2-1)*	.5	1	1
CLLS-141	Clinical Lab Assistant Skills 2	3	2	4
CLLS-155	Clinical Experience 2		8	2
CMPA-103	Microcomputer Applic. for Windows	3		3
SPCH-203	Fundamentals of Speech	3		3
		9.5	11	13

Upon successful completion of the requirements for this program, a **Certificate of Completion** in **Clinical Laboratory Assistant** from STCC will be awarded.

Cosmetology COSM.CRT

Certificate Program

The Cosmetology program is designed to provide the student with the basics of the art, science, and business aspects of the cosmetology profession. The program is designed to prepare the student to become a competent, qualified professional, meeting entry-level industry standards. Students receive valuable experience practicing their skills in the STCC Cosmetology Client lab.

The course of study is a two-semester program, beginning in the fall and ending in the spring. This one-year certificate program follows the guidelines outlined by the Division of Professional Licensure, Massachusetts Cosmetology. Courses are designed as competency-based. Theory, lab and clinical are required components. After meeting course and program requirements, the student will receive an application for the State Licensing Exam. After two years of employment, the graduate may apply for licensure as a Cosmetologist with the Massachusetts Board of Registration, Division of Professional Licensure, Massachusetts Cosmetology.

The applicant must be a high school graduate or have a GED. The student must have high school English grades of "C" or better. Program prerequisite: Students must place at DRDG-092 or higher on the placement test. Prerequisite courses include: first semester DRDG-091, DWRT-091, ARTH-078, FRES-160, DRDG-092, SPCH-203, BIOL-102 and ENGL-100.

Intra-college Transfer: Students must place at DWRT-099 and DRDG-092 and/or test at ENGL-100 on the STCC English placement test.

Minimum Grade Requirement: A student must maintain a minimum grade of "C" (73%) in each cosmetology course. A student must meet minimum grade requirements in the fall semester in order to continue to spring semester and qualify for graduation. The related science course BIOL-146 Essentials of Human Biology 1 and SMBE-125 Introduction to Entrepreneurship, are customized for the Cosmetology program and therefore restricted to Cosmetology students. If a student fails any of the required Cosmetology courses, he/she may re-apply for the following semester that the courses are offered. Application for licensure will not be given until the hours and course requirements are met. In this case, Massachusetts Board of Registration, Division of Professional Licensure, Massachusetts Cosmetology will be notified.

Attendance Requirement: Attendance is compulsory because of the minimum hour requirement for graduation. The college **does not** provide for make-up time due to absenteeism. If a student fails to meet the attendance requirement,he or she may be dropped from the program within the first two semesters.

Kits, Books, and Uniforms: Cosmetology students must purchase assigned books, uniforms and kits for the start of class. The kit is comprised of essential equipment and supplies needed to participate in class.

Health Forms: Must be complete at the start to participate and receive credit in laboratory and class.

CORI: All accepted students must undergo a Criminal Offender Record Information or other check. Depending on the findings, the student may or may not be allowed to continue in the program of study. This is also required by the Massachusetts Board of Registration, Division of Professional Licensure, Massachusetts Cosmetology upon entry and exit of the program.

Programmatic Technical Standards: Students must be able to meet all standards and will participate in all scheduled laboratory sessions.

Upon successful completion of the requirements for this program, a **Certificate in Cosmetology** and application to apply for the licensure examination will be provided.

SEMESTER 1

No.	Course Title	Class	Lab	Credits
COSM-120	Cosmetology Skills 1	2		2
COSM-121	Cosmetology Skills Lab 1		25	6
COSM-122	Aesthetics 1	2		2
COSM-123	Aesthetics Lab 1		4	2
BIOL-146	Essentials of Human Biology 1	2	2	3
		6	31	15

SEMESTER 2

COSM-220	Cosmetology Skills 2	2		2
COSM-221	Cosmetology Skills Lab 2		25	6
COSM-222	Aesthetics 2	2		2
COSM-223	Aesthetics Lab 2		4	2
SMBE-125	Intro. to Entrepreneurship	3		3
		7	29	15

Dental Assistant

DAST.CRT

Certificate Program

The Dental Assistant curriculum encompasses the multi-disciplinary team concept. Theoretical skills are attained in conjunction with supervised off-campus clinical affiliation experiences. The curriculum conforms to the standards which are required by the Commission on Accreditation of Dental and Dental Auxiliary Educational Programs. Upon successful completion of the program, the student graduates with a Certificate in Dental Assistant and is eligible to take the Dental Assistant National Board Examination.

The program in dental assisting is fully accredited by the Commission on Dental Accreditation of the American Dental Association, a specialized accrediting body recognized by the Council on Postsecondary Accreditation and by the United States Department of Education.

An applicant should be a high school graduate, or possess a G.E.D. equivalency with a college preparatory background in English, biology (with a lab), mathematics, and typing. The Scholastic Aptitude Test (SAT1) is optional, but preferred. A reading examination will be administered to those individuals who are accepted into the program. Applications should be submitted to the Admissions Office. All accepted students must undergo a Criminal Offender Record Information or other check. Depending on the findings, the student may not be allowed to continue in the program of study.

The Dental Assistant program has two primary objectives: to prepare the student for employment as a professional member of the dental team, functioning as a competent dental assistant after graduation; and to prepare and motivate the student to continue his/her dental education toward a degree. Advanced degrees will enable the qualified student to participate in broader areas of the dental profession.

Dental assisting students must purchase a kit which is non-refundable and is comprised of essential materials and supplies. In addition, other expenses will be required as the academic year progresses. Information will be provided on acceptance.

Clinical affiliation is conducted off-campus at various dental offices throughout Western Massachusetts. The student is responsible for providing transportation to and from each clinical and educational facility. The student is expected to be in full dress uniform during this portion of the curriculum.

The minimum grade requirement for the Dental Assistant Program is a grade of "C" (2.0) in each course. Upon the successful completion of requirements for this program, as listed below, a **Certificate in Dental Assistant** will be awarded.

SEMESTER 1

No.	Course Title	Class	Lab	Credits
DAST-100	Dental Assisting Techniques 1	2	3	3
DAST-102	Oral Anatomy	2		2
DAST-103	Dental Radiology 1	2	2	3
DAST-105	Dental Sciences 1	2		2
DAST-106	Dental Materials 1	2	3	3
ENGL-100	English Composition 1 *(Note)*	3		3
BIOL-148	Basics of Anatomy & Physiology *(Note)*	3	2	4
		16	10	20

SEMESTER 2

DAST-200	Dental Assisting Techniques 2	2	3	3
DAST-201	Dental Sciences 2	3		3
DAST-202	Dental Records	2		2
DAST-203	Dental Radiology 2		2	1
DAST-204	Clinical Affiliation		20	5
		7	25	14

SUMMER			
SPCH-203	Fundamentals of Speech	3	3
PSYC-100	General Psychology	3	3
		6	6

Note: ENGL-100 and BIOL-148 should be taken the summer before Semester 1. It is mandatory that the student complete ENGL-100 and BIOL-148 with at least a 73% ("C") average to receive transfer credit for these courses.

Dental Hygiene DHYG.AS

Associate Degree Program

The Dental Hygiene program educates men and women to become vital members of the dental health profession. The two-year basic core curriculum leading to an Associate in Science degree follows the guidelines adopted by the American Dental Association's Commission on Dental Accreditation. The graduate is eligible for licensing examination in each of the fifty states. She/he may transfer credits toward a Baccalaureate degree. The Dental Hygiene program is accredited by the Commission on Dental Accreditation of the American Dental Association, a specialized accrediting body recognized by the Council on Postsecondary Accreditation and by the United States Department of Education.

The curriculum is designed to provide the student a broad educational experience. The student is thus prepared to render preventive oral health services and dental health education. Students receive clinical experience, at the STCC Dental Hygiene Clinic. Students are responsible to complete *clinical services* on a minimum number of patients. Patient recruitment is the responsibility of the student. Assistance will be provided by the College. The purchase of an instrument kit is mandatory for each dental hygiene student.

All courses listed in the program curricula are required for graduation. The dental hygiene courses are restricted to the semester in which they appear in the curricula. The curriculum customarily is completed within two regular academic years. However, advanced placement will be given to those students qualifying through challenge exams and transfer credits.

Applicants for admission to the Dental Hygiene program must be high school graduates or the equivalent. The candidate must have completed high school-level courses in algebra 1, algebra 2 or geometry, biology, and chemistry with grades of "C" or better. The SAT is suggested but not required for admission. Applicants who have completed college-level courses including anatomy & physiology 1 and 2, biochemistry, microbiology, English, psychology, sociology, and speech will be given priority in the admission process. All accepted students must undergo a Criminal Offender Record Information or other check. Depending on the findings, the student may not be allowed to continue in the program of study.

Students must achieve a minimum grade of "C" (73%) or better in each Dental Hygiene course. In addition, students must attain a minimum grade of "C" (73%) or better in

related science or general studies courses. The student who is unable to meet this minimum requirement will be withdrawn from the program. Application for re-entry will be based on the recommendations of the faculty and program coordinator.

Upon completion of the requirements for this program, as listed below, the degree of **Associate in Science in Dental Hygiene** will be awarded.

SEMESTER 1

No.	Course Title	Class	Lab	Credits
ENGL-100	English Composition 1	3		3
BIOL-132	Anatomy & Physiology 1	3	2	4
BIOL-140	Biochemistry	3		3
DHYG-103	Oral Anatomy 1	2		2
DHYG-101	Clinical Practice 1	2	6	4
DHYG-104	Dental Radiology	2	2	3
		15	10	19

SEMESTER 2

BIOL-121	Microbiology	3	3	4
BIOL-232	Anatomy & Physiology 2	3	2	4
DHYG-200	Nutrition and Oral Health	2		2
DHYG-201	Oral Pathology	2		2
DHYG-202	Clinical Practice 2	2	11	5
DHYG-203	Oral Anatomy 2	2		2
		14	16	19

SEMESTER 3

PSYC-100	General Psychology	3		3
DHYG-300	Periodontology	2		2
DHYG-301	Dental Materials	2	3	3
DHYG-302	Pharmacology	2		2
DHYG-303	Clinical Practice 3	2	16	6
		11	19	16

SEMESTER 4

SPCH-203	Fundamentals of Speech	3		3
SOCL-100	Intro. to Sociology	3		3
DHYG-400	Community Dental Health	3		3
DHYG-401	Clinical Practice 4	2	16	6
DHYG-402	Applied Dental Auxiliary Skills	1	3	2
		12	19	17

Diagnostic Medical Imaging DMID

Nuclear Medicine DMIN.AS
Associate Degree Program

Nuclear medicine technologists utilize radioactive materials or tracers for the diagnosis or treatment of diseases. When introduced into the body, a radiotracer behaves like its nonradioactive counterpart. Therefore, its location in the body can be traced by using an appropriate detector.

The nuclear medicine technologist learns to prepare and administer the radiotracer, perform the radionuclide study which may include the use of a computer, and then produce a final qualitative or quantitative product, so that a diagnosis and/or treatment may be made by a physician who specializes in the field.

The Nuclear Medicine program at STCC is 24 months in length, beginning in September and ending two full years later. Students spend two or three days each week on clinical affiliation at Baystate Medical Center, the largest medical center in Western New England; Hartford Hospital; Manchester Memorial Hospital; or Mercy Hospital. The rest of the week is spent at the College in didactic courses. The curriculum also includes two summer sessions.

Minimum course requirement for graduation is a grade of "C" or better in all program curriculum. Without exception, failing grades (below "C" or 73%) require that the student reapply to the program. This privilege may be used only once, and is based on available space. A more complete description of the program requirements may be found in the Handbook for the Radiologic Health Sciences which is distributed at the beginning of each Fall semester. At graduation the student receives an Associate in Science in Diagnostic Medical Imaging, and is eligible to apply for the national registry examination given by the American Registry of Radiologic Technologists and the Nuclear Medicine Technology Certification Board. The program also meets the requirements for state licensing application. The program is fully accredited by the Joint Review Committee on Educational Programs in Nuclear Medicine Technology.

Applicants should have completed college-level: algebra 1 & 2, chemistry, and MAST-101 Medical Terminology 1. Students must also:

1) meet the technical standards established by the department. These standards are available through the Admissions Office.
2) attend an informative session scheduled with the program director
3) complete the application which will be reviewed jointly by the Director of Admissions and the program director

Students are responsible for the cost of uniforms, radiation monitors, physical examinations, health insurance, liability insurance, books, calculator, and laboratory manuals. All accepted students must undergo a Criminal Offender Record Information or other check. Depending on the findings, the student may not be allowed to continue in the program of study.

Upon successful completion of the requirements listed below, the degree of **Associate in Science in Diagnostic Medical Imaging** will be awarded.

SEMESTER 1

No.	Course Title	Class	Lab	Credits
NMDT-102	Intro. to Nuclear Medicine	3		3
NMDT-103	Practicum 1 *(10 wks 0-15-2)*		10	2
MAST-210	Health Science 2	2	2	3
BIOL-132	Anatomy & Physiology 1	3	2	4
NMDT-105	Orientation to Practicum *(5 wks 3-0-1)*	1		1
CMPA-103	Microcomputer Applications for Windows	3		3
		12	14	16

SEMESTER 2

NMDT-207	Practicum 2		16	2
BIOL-232	Anatomy & Physiology 2	3	2	4
ENGL-100	English Composition 1	3		3
NMDT-210	Nuclear Imaging of Organs	3		3
NMDT-212	Nuclear Cardiology	2		2
PSYC-100	General Psychology	3		3
		14	18	17

SUMMER 1 (11 Weeks) *includes 1 week for make-up*

NMDT-209	Practicum *(10 wks 8-32-5)*	5	21	5

SEMESTER 3

NMDT-301	Practicum 3		24	5
PHYS-300	Radiologic Physics 1	3	2	4
NMDT-306	Statistics and Instrumentation	3		3
MAST-207	Venipunc. with Affiliation *(7 wks 1-2-1)*	.5	1	1
		6.5	27	13

SEMESTER 4

NMDT-401	Practicum 4		24	5
NMDT-417	Special Procedures in Nuclear Medicine *(10 wks 3-0-2)*	2		2
PHYS-400	Nuclear Physics 1	3	2	4
ENGL-200	English Composition 2	3		3
RADG-414	Radiation Biology *(5 wks 3-0-1)*	1		1
CLLS-409	Lab Skills in Nuclear Med. *(7 wks 1-3-1)*	.5	1.5	1
		9.5	27.5	16

SUMMER 2 (11 Weeks) *includes 1 week for make-up*

NMDT-410	Practicum *(10 wks 8-32-5)*	5	21	5

Radiography DMIR.AS

Associate Degree Program

The Radiography program prepares an individual to become a member of the allied health team, assisting in the diagnostic methodologies of radiology. The program is based on a twenty-three month curriculum, and students must complete requirements within this two-year period.

The affiliate hospitals of Baystate Medical Center, the largest medical center in Western New England, provide the major clinical component. Minor affiliations are available on a limited basis. Intersessions and summer sessions provide the major clinical component of the program. Additional clinical experience is assigned during the academic semesters. Students are charged for these periods according to College policy.

The College provides all didactic and laboratory classes. An energized x-ray unit, various phantoms (artificial body parts), and auxiliary equipment allow the student the development of psychomotor skills prior to patient exposure. Courses in anatomy and physiology, physics, computers, patient care, and general education complete the curriculum.

Upon completion of the program, students are eligible to apply for the national board examination in radiologic technology, administered by the American Registry of Radiologic Technology.

The program is fully accredited by the Joint Review Committee on Education in Radiologic Technology (JRECT). Copies of the *Standards for an Accredited Educational Program for the Radiographer* are available from the office of the program director.

In order for a student to matriculate in Radiography, he or she must achieve a minimum grade of "C" (73) or better in all courses. Students not meeting the minimum grade requirement of "C" (73%) will be withdrawn from the program.

Applicants for admission to the program should have completed two years of high school algebra or ALGB-093 or its equivalent and one year each of biology and chemistry, and the SAT1, with a combined score of 800. Students must complete MAST-101 Medical Terminology 1 before entering the program.

All accepted students must undergo a Criminal Offender Record Information or other check. Depending on the findings, the student may not be allowed to continue in the program of study. NOTE: Clinical Orientation is required prior to Clinical Practicum.

Upon successful completion of the requirements of the program, as listed below, the degree of **Associate in Science in Diagnostic Medical Imaging** will be awarded.

SEMESTER 1

No.	Course Title	Class	Lab	Credits
RADG-111	Radiographic Positioning 1	3	2	4
RADG-212	Equipment Operation and Maintenance	2	1	2
MAST-210	Health Science 2	2	2	3
BIOL-132	Anatomy and Physiology 1	3	2	4
RADG-116	Intro. to Clinical Practice *(10 wks)*	3		2
HCAR-205	Medical Imaging and Computers	3		3
		16	7	18

SEMESTER 2

RADG-112	Image Production and Evaluation	2	1	2
RADG-211	Radiographic Positioning 2	3	2	4
RADG-213	Clinical Practicum 1		16	2
BIOL-232	Anatomy & Physiology 2	3	2	4
ENGL-100	English Composition 1	3		3
		11	21	15

SUMMER 1 (8 weeks)

RADG-214	Clinical Practicum 2 *(0-40-5)*		20	5

SEMESTER 3

RADG-311	Special Procedures and Radio Pharmaceuticals	2		2
RADG-313	Clinical Practicum 3 (0-16-2)		24	3
PHYS-300	Radiologic Physics 1	3	2	4
RADG-314	Radiographic Positioning 3	3	1	3
	Elective: Social Science *(Note 1)*	3		3
		11	27	15

SEMESTER 4

RADG-413	Seminar/Quality Control	3	1	3
RADG-418	Radiation Protection and Biology *(7 wks)*	2		1
RADG-415	Clinical Practicum 4		24	3
ENGL-200	English Comp. 2: Intro. to Lit.	3		3
BIOL-340	Sectional Anatomy	2	3	3
		10	28	13

SUMMER 2 (7 weeks)

RADG-416	Clinical Practicum 5 *(0-40-5)*		20	5

Note 1: General Psychology (PSYC-100) or Intro. to Sociology (SOCL-100)

Sonography
Associate Degree Program DMIS.AS

Sonography is a rapidly growing technology, used to locate, evaluate, and record pertinent anatomical, pathological, and functional data to aid the physician in the diagnosis of disease and injury. The graduate of this program may be employed in a wide variety of health care settings. The STCC program is a careful blend of didactic, laboratory, and hands-on clinical experiences that prepares the successful graduate for the specialties of abdominal and OB/GYN sonography.

Graduates of this program of study will be awarded the Associate in Science in Diagnostic Medical Imaging degree which allows application for candidacy to sit for the American Registry of Diagnostic Medical Sonographers Registry Examination to earn the title of Registered Diagnostic Medical Sonographer (RDMS). This program is accredited by the Commission on Accreditation of Allied Health Education Programs (CAAHEP) on recommendation of the Joint Review Committee on Education in Diagnostic Medical Sonography (JRCDMS.)

Applicants must be high school graduates or hold a certificate of equivalency. Applicants must also have completed high school algebra 2, biology with a lab, and chemistry. The College Board examination (SAT 1) is recommended. Applicants must also demonstrate satisfactory completion in college of: biology with a lab, 100-level math, college physics (PHYS-130), medical terminology (MAST-101) and communication skills. Students may be offered a conditional acceptance until all prerequisites are met.

All accepted students must undergo a Criminal Offender Record Information or other check. Depending on the findings, the student may not be allowed to continue in the program of study.

On the STCC placement tests, students must demonstrate competencies equal to algebra 2, and achieve admission to college-level English (ENGL-100).

Students will also have to have a physical examination/immunization and recommendation from the examining physician that he or she is physically fit for the program and subsequent clinical affiliation. Attendance at clinical affiliates located in Massachusetts and Connecticut is required.

Minimum Grade Requirement

The Sonography student must achieve a minimum grade of "C" (73%) in each Sonography (DMDS) course and in the health and science courses required by the program. All health requirements must be maintained. Students not meeting program requirements will be withdrawn from the course and therefore the program.

Upon the successful completion of all requirements for this program, the degree of **Associate in Science in Diagnostic Medical Imaging** will be awarded.

SEMESTER 1

No.	Course Title	Class	Lab	Credits
ENGL-100	English Composition 1	3		3
BIOL-132	Anatomy & Physiology 1	3	2	4
DMDS-100	Sonographic Physics and Instrumentation 1	2	2	3
HCAR-205	Computers in Medical Imaging	3		3
	Elective: Mathematics *(Note 1)*	3		3
		14	4	16

SEMESTER 2

MAST-210	Health Science 2	2	2	3
DMDS-200	Sonographic Physics and Instrumentation 2	2	2	3
BIOL-232	Anatomy & Physiology 2	3	2	4
BIOL-340	Sectional Anatomy	2	2	3
		9	8	13

SUMMER 1 (8 Weeks)

DMDS-202	Sonographic Procedures 1 *(4-0-2)*	2		2
DMDS-203	Clinical Practicum 1 *(0-16-2)*		8	2
		2	8	4

SEMESTER 3

DMDS-300	Sonographic Procedures 2	3		3
DMDS-301	Clinical Practicum 2		24	3
DMDS-310	Seminars in Medical Imaging	3		3
WRIT-202	Technical Report Writing	3		3
	Elective: Social Science *(Note 2)*	3		3
		12	24	15

SEMESTER 4

DMDS-400	Sonographic Procedures 3	3		3
DMDS-401	Clinical Practicum 3		24	3
HCAR-450	Healthcare Administration Practices	3		3
ENGL-200	English Composition 2: Intro. to Lit.	3		3
SPCH-203	Fundamentals of Speech	3		3
		12	24	15

SUMMER 2 (8 Weeks)

DMDS-402	Sonographic Procedures 4 *(4-0-2)*	2		2
DMDS-403	Clinical Practicum 4 *(0-24-2)*		12	2
		2	12	4

Notes:
(1) college-level (100 or higher) mathematics course
(2) psychology, sociology, or anthropology

Integrative Health Care INHC

Massage Therapy INHM.AS

Associate Degree Program

Massage Therapy is a personal health service that employs a variety of health and wellness benefits to consumers. The two major benefits of receiving massage therapy are stress reduction, including prevention of stress-related disease, and rehabilitation for pain relief and management of orthopedic conditions and injury recovery. The profession has its roots in the entire major ancient healing systems of the world. The Massage Therapy program stresses learning in both the art and science of massage therapy. Students gain knowledge of anatomy and physiology, kinesiology, and pathology as they relate to therapeutic massage. Students in the program will study Swedish massage, deep tissue, and rehabilitative massage, seated massage, Reiki, and Asian bodywork. In the second year of study, students work in the on-campus clinic to gain practical experience. The program prepares students for licensure in the Commonwealth of Massachusetts and for national certification as bodyworkers. Graduates work in private practice, day spas, medical and chiropractic offices, and in geriatric care settings.

This program is accredited by the Commission on Massage Therapy Accreditation (COMTA) and is a member of the AMTA Council of Schools. All accepted students must undergo a Criminal Offender Record Information or other check.

Requirements for entry into the program include completion of high school biology and algebra 2. Prerequisites to the program are MAST-101 Medical Terminology 1 and CMPA-103 Microcomputer Applications for Windows. Students must receive a minimum grade of "B-" (80%) or better in all department courses, noted with the prefix INHC.

Upon completion of the requirements listed below, the degree of **Associate in Science** in **Massage Therapy** will be awarded.

SEMESTER 1

No.	Course Title	Class	Lab	Credits
ENGL-100	English Composition 1	3		3
BIOL-148	Basics of Anatomy & Physiology	3	2	4
HCAR-220	Holistic Health and Wellness	2		2
INHC-110	Massage Techniques 1	2	6	5
SOCL-100	Introduction to Sociology	3		3
		13	8	17

SEMESTER 2

PSYC-100	General Psychology	3		3
ENGL-200	English Comp.2: Intro. to Literature	3		3
HCAR-120	Stress in Health and Disease	2	1	2
HCAR-350	Pathological Conditions	3		3
INHC-210	Massage Techniques 2	2	6	5
		13	7	16

SEMESTER 3				
MAST-211	Health Science 3 *(7 wks 1-2-1)*	.5	1	1
INHC-310	Massage Techniques 3	2	6	5
INHC-301	Muscle Structure and Function	3	2	4
INHC-350	Clinical Internship 1		2	1
	Elective: General Education	3		3
		7.5	13	14
SEMESTER 4				
HCAR-430	Complementary Medical Therapy	2		2
INHC-400	Massage Techniques 4	2	6	5
INHC-412	Oriental Bodywork	1	2	2
INHC-450	Clinical Internship 2		2	1
PSYC-325	Human Growth and Development	3		3
	Elective: General Education	3		3
		11	10	16

Medical Assistant MAST.AS

Associate Degree Program

This two-year program of study prepares students to become health care providers and patient educators who have multiple skills, qualities, and abilities, and are able to meet the rigorous demands of our health care delivery systems. Graduates are capable of functioning in the hospital, clinic, neighborhood health center, health maintenance organization, insurance company, group practice or single physician's office. The Medical Assistant program is accredited by the Commission on Accreditation of Allied Health Education Programs (CAAHEP), on recommendation of the Committee on Accreditation for Medical Assistant Education, also known as the Curriculum Review Board of the American Association of Medical Assistants' Endowment (AAMAE). Graduates of the program are eligible to take the national certification examination for Medical Assistants, and may also be eligible to take a national certification exam for Phlebotomists.

The curriculum is designed to teach students to assist in administrative and clinical procedures in varied health care agencies. During the externship period, students perform such duties as word processing; recordkeeping; billing; blood, urine and diagnostic tests; and specimen processing. In addition, students assist the physician in carrying out the techniques of patient care such as performing electrocardiograms, assisting with physical examinations, and performing phlebotomy. STUDENTS MUST BE AWARE THAT THE EXTERNSHIP PERIOD WILL REQUIRE TRAVELING TO THE VARIOUS SITES, AND THAT THEY ARE RESPONSIBLE FOR THEIR OWN TRANSPORTATION. Graduates are qualified to accept positions in medical offices, clinics, health maintenance organizations, insurance companies, hospitals, ambulatory care centers, or any other area where their broad basic skills are needed.

The Medical Assistant student must be able to meet the following technical standards: possess motor skills, manual dexterity, vision/hearing normal or device-corrected, eye/hand coordination, and skill in the art of oral and written communication.

Students will be required to participate in all scheduled laboratory sessions. ALL students will be required to assume the role of the "patient" as well as that of the "medical assistant."

Applicants must be high-school graduates or hold a certificate of equivalency. High school courses in biology, algebra, and keyboarding are preferred. On the STCC placement tests, students must demonstrate competencies for math at the level of ALGB-081, English at ENGL-100, and reading at level DRDG-092.

Program prerequisites: MAST-101 Medical Terminology 1 and OFFS-100 Basic Keyboarding are recommended prior to entry into the program. (OFFS-104 Keyboarding 1 may be substituted for OFFS-100.) All accepted students must undergo a Criminal Offender Record Information or other check. Depending on the findings, the student may not be allowed to continue in the program of study.

Minimum Grade Requirements: To continue in the progression of courses offered in the Medical Assistant program, a student must obtain a grade of "C" (73%) or better in all Medical Assistant (MAST) courses. Students must maintain an average grade of "C" or better in all other courses. ENGL-100 English Composition 1 and OFFS- 230 Medical Computer Applications must be completed before entering the senior year. Medical Assistant courses are planned in conjunction with the clinical agencies, and may deviate from the College hours.

Upon successful completion of requirements for this program, as listed below, the degree of **Associate in Science in Medical Assistant** will be awarded.

SEMESTER 1

No.	Course Title	Class	Lab	Credits
MAST-122	Intro. to Medical Assisting *(Note 1)*	3		3
MAST-160	Medical Assistant Techniques 1 *(Note 1)*	3	2	4
MAST-161	Medical Office Manager 1		2	1
MAST-301	Intro. to Human Disease	3		3
MAST-319	Pharmacology/Dosage and Calculations *(2nd 7 wks 2-0-1)*	1		1
MAST-321	Intro. to Pharmacology *(1st 7 wks 2-0-1)*	1		1
ENGL-100	English Composition 1	3		3
		14	4	16

SEMESTER 2

MAST-119	Applied Legal Concepts *(2nd 7 wks 2-0-1)*	1		1
MAST-216	Venipuncture/Phlebotomy for the Medical Asst. *(1st 7 wks 1-2-1)*	.5	1	1
MAST-220	Adm. Skills for the Med. Asst.	3		3
MAST-260	Medical Office Techniques 2	3	2	5
MAST-261	Medical Office Manager 2		2	1
MAST-218	Lab Procedures for the Medical Assistant *(2nd 7 wks 1-2-1)*	.5	1	1
OFFS-230	Medical Computer Applications	1	2	2
ENGL-200	English Composition 2: Intro. to Lit.	3		3
		12	8	16

SEMESTER 3

BIOL-104	Human Biology 1	3	2	4
PSYC-100	General Psychology	3		3
CMPA-103	Micro. Apps. for Windows *(or)*			
CMPA-210	Comp.-Med. Comm. for Glbl. Village	3		3
	Elective: General	3		3
		12	2	13

SEMESTER 4

BIOL-204	Human Biology 2	3	2	4
SOCL-100	Introduction to Sociology *(or)*			
PSYC-325	Lifespan Human Growth and Dev.	3		3
MAST-450	Med. Asst. Techniques 3 *(7 wks 2-24-3)*	1	12	3
MAST-460	Mgmt. Skills Med. Asst. *(7 wks 6-24-5)*	3	12	5
		10	26	15

Note 1: MAST-160/MAST-161/MAST-122 must be taken concurrently.

MEDICAL ASSISTANT **MEDA.COC**
Certificate of Completion program

This one-year program of study prepares students to become health care providers and patient educators who have multiple skills, qualities, and abilities, and are able to meet the rigorous demands of our health care delivery systems. Graduates are capable of functioning in the hospital, clinic, neighborhood health center, health maintenance organization, insurance company, group practice, or single physician's office.

The Medical Assistant program is accredited by the Commission on Accreditation of Allied Health Education (CAAHEP), on recommendation of the Committee of Accreditation for Medical Assistant Education, also known as the Curriculum Review Board of the American Association of Medical Assistants' Endowment (AAMAE.) Graduates of the program are eligible to take the national certification examination for medical assistants, and may also be eligible to take a national certification exam for phlebotomists.

Students will be required to participate in all scheduled laboratory sessions. ALL students will be required to assume the role of "patient" as well as that of the "medical assistant."

Applicants must be high school graduates or hold a certificate of equivalency. High school courses in biology, algebra, and keyboarding are preferred. On the STCC placements tests, students must demonstrate competencies for math at the level of ALGB-081, English at ENGL-100, and reading at DRDG-092, or take the required courses.

Program prerequisites: MAST-101 Medical Terminology 1and OFFS-100 Basic Keyboarding are recommended prior to entry into the program. (OFFS-104 Keyboarding 1 may be substituted for OFFS-100.) All accepted students must undergo a Criminal Offender Record Information or other check. Depending on

the findings, the student may not be allowed to continue in the program of study. For further information, contact the office of the Dean of Health.

Minimum Grade Requirements: To continue in the progression of courses offered in the Medical Assistant program, a student must obtain a grade of "C" (73%) or better in all Medical Assistant (MAST) courses. Students must maintain an average grade of "C" or better in all other courses.

Students who complete this program may articulate into the two-year Medical Assistant associate degree program.

Medical Assistant courses are planned in conjunction with the clinical agencies, and may deviate from the college hours.

SEMESTER 1

No.	Course Title	Class	Lab	Credits
MAST-122	Intro. to Medical Assisting *(Note 1)*	3		3
MAST-160	Medical Assistant Techniques 1 *(Note 1)*	3	2	4
MAST-161	Medical Office Manager 1		2	1
MAST-301	Intro. to Human Disease	3		3
MAST-319	Pharmacology/Dosage and Calculations *(2nd 7 wks 2-0-1)*	1		1
MAST-321	Intro. to Pharmacology *(1st 7 wks 2-0-1)*	1		1
		11	4	13

SEMESTER 2

MAST-119	Applied Legal Concepts *(2nd 7 wks 2-0-1)*	1		1
MAST-216	Venipuncture/Phlebotomy for the Medical Asst. *(1st 7 wks 1-2-1)*	.5	1	1
MAST-220	Adm. Skills for the Med. Asst.	3		3
MAST-260	Medicla Office Techniques 2	3	2	5
MAST-261	Medical Office Manager 2		2	1
MAST-218	Lab Procedures for the Medical Assistant *(2nd 7 wks 1-2-1)*	.5	1	1
OFFS-230	Medical Computer Applications	1	2	2
		9	8	14

SUMMER (Affiliation)

MAST-450	Medical Assistant Techniques 3 *(5 weeks 3-36-3)*	1	12	3

Note 1: MAST-160/MAST-161/MAST-122 must be taken concurrently

Upon successful completion of the requirements for this program, a **Certificate of Completion in Medical Assistant** from STCC will be awarded.

Nursing
Associate Degree Program

NURS.AS

Professional nurses are in great demand, and it takes a special individual to excel in this field. STCC offers entry into professional nursing through its associate degree program. STCC nurses are prepared to provide safe and effective nursing care across the life span.

Contributions by professional nurses make differences in the lives of people. Nurses hold positions in hospitals, long- and short-term care nursing homes, schools, private homes, and clinics. Travel nurses can accept varied assignments around the world. The U.S. Armed Services can also provide exceptional career possibilities. A registered nurse may pursue additional opportunities in nurse midwifery, nurse anesthesia, nurse practitioner, clinical nurse specialist, and more.

STCC nursing graduates are working across the country; very importantly, STCC nurses are providing western Massachusetts and northern Connecticut communities with expert professional nursing care. Our graduates have been recipients of state and national awards for excellence.

STCC is also a trendsetter. The SIMS Virtual Hospital @ STCC™ provides each nursing student the opportunity to apply nursing abilities and critical thinking skills in a simulated setting. Go to http://health.stcc.edu/SIMSMedical to see what nursing students are doing with simulation.

At STCC, nursing students have the opportunity to form the interdisciplinary team so needed in today's health care system. They may work with respiratory therapy, utrasound, surgical technology, medical assistant, radiography and other students in STCC's School of Health.

Graduates of the STCC nursing program receive an Associate in Science in Nursing degree and are eligible to take the national licensure exam NCLEX-RN. Upon successful completion, a license to practice registered nursing is awarded.

All students in the School of Health must undergo a CORI (Criminal Offender Record Information) and a SORI (Sexual Offender) check. The ability to take your licensure exam can be dependent on this check. Depending on the findings, students may be denied a clinical placement and a seat for the licensure exam.

This program is approved by the BORN (Board of Registration in Nursing) for Massachusetts, as well as by the NLNAC (National League for Nursing Accrediting Agency.) The NLNAC can be reached at 61 Broadway, New York, NY 10006.

Articulation agreements with the University of Massachusetts, Elms College, American International College, and Russell Sage College provide nursing students with the opportunity to continue their nursing education on the bachelor's, master's and doctoral level. All advanced practice requires upper level degrees, and all graduates are encouraged and advised to pursue more educational opportunities.

Prerequisites for admission

An applicant to the STCC Nursing program must be a high school graduate or equivalent. The candidate also must have completed a course in algebra 2, in high school or college, with a grade of C+ or better. The HESI Admissions test (A2) is required with a minimum score of 77. Additionally, applicants must have completed NURS-099 with a grade of 90 or better. Students who have repeated a college science course more than once will not be considered for admission.

Prerequisites as well as co-requisite grade expectations will not be waived under any circumstances, nor will the HESI score requirements.

All students must maintain a C+ or higher in all co-requisite courses as well as nursing courses.

All accepted students are required to maintain CPR/AED certification as Professional Rescuers from the American Red Cross or the American Heart Association. All students must have complete health and immunization records, and must meet the technical standards set by the Department of Nursing.

In order for a student to matriculate in the Department of Nursing, the student must maintain the grade of 77%. Grades will not be rounded up. HESI testing is continued throughout the program, and students are required to meet the standards set by the faculty.

1. An average of 77% or better MUST be maintained in nursing. Students not meeting this grade expectation will not be allowed to matriculate in nursing. Students may request readmission only once. Readmission requests are evaluated by a review committee, and consideration is based on ability to succeed in nursing and on the availability of seats in the program.
2. Students must pass both academically and clinically, and must maintain safe practice.
3. Attendance is expected in the classroom, and no more than 10% of clinical days are allowed to be missed.

LPN Admissions

1. If an LPN meets the set admission criteria, the first semester may be challenged. The applicant may take the NURS-102 final exam and earn a grade of 77% or higher. A portfolio of all expected clinical work for NURS-102 must also be submitted, and must meet the expected standards of a NURS-102 student.
2. A valid LPN license from the state they currently practice in must be shown.
3. Students must have graduated from an approved/accredited school of practical nursing
4. The fee to take the LPN exam is $7.50; however, the applicant must pay for the credits assigned to NURS-102, which is $10 per credit. After payment and successful completion, the transcript will state NURS-102 (8 credits.)
5. The exam may be taken only once.
6. After successful completion of the above criteria, the LPN can be admitted to NURS-202 in the January session.
7. LPNs are given the above consideration based on previous education. An LPN will function as a student nurse in the STCC nursing curriculum, and not as a licensed individual.

Note: Students will be required to take nationally normed tests throughout the curriculum and to make a satisfactory score on such tests. In the last semester of the curriculum, students will be required to take a comprehensive exam and to make a satisfactory score on such an exam prior to taking the NCLEX licensing exam.

Please link to http://health.stcc.edu and click to Nursing for more detailed information.

Upon successful completion of requirements for the Nursing program, as listed below, the degree of **Associate in Science in Nursing** will be awarded.

PREREQUISITE

No.	Course Title	Credits
NURS-099	Basic Medication Calculation	3
	(Offered in fall, spring, and summer sessions)	
	(Note: NURS-099 must be taken prior to first semester Nursing courses.)	

SEMESTER 1

NURS-102	Nursing 1	8
NURS-102L	Nursing Lab 1	
BIOL-132	Anatomy & Physiology 1 *	4
BIOL-132L	Anatomy & Physiology 1 Lab	
PSYC-100	General Psychology	3
ENGL-100	English Composition 1	3
	Total	18

SEMESTER 2

NURS-202	Nursing 2	9
NURS-202L	Nursing 2 Lab	
BIOL-232	Anatomy & Physiology 2 *	4
BIOL-232L	Anatomy & Physiology 2 Lab	
PSYC-325	Lifespan Human Growth and Development	3
	Total	16

SEMESTER 3

NURS-302	Nursing 3	9
NURS-302L	Nursing 3 Lab	
BIOL-121	Microbiology	4
BIOL-121L	Microbiology Lab	
SOCL-100	Intro. to Sociology	3
	Total	16

SEMESTER 4

NURS-402	Nursing 4	9
NURS-402L	Nursing 4 Lab	
NURS-403	Nursing Seminar	2
ENGL-200	English Composition 2: Intro. to Lit.	3
	Elective	3
	Total	17

Note: All courses must be taken prior to or during the semester as listed above.

* Anatomy & Physiology courses over five years old must be repeated or challenged. Arrangements to challenge are made through the Biological Sciences department chairperson.

Rehabilitation Therapies

The Rehabilitative Therapies cluster offers an interdisciplinary approach to Occupational Therapy Assistant and Physical Therapist Assistant. Students enrolled in one of these programs will become familiar with the other. Shared experiences will help students better understand the contribution each field makes toward the well-being of an individual.

Occupational Therapy Assistant OCCP.AS
Associate Degree Program

Occupational therapy assistants help people with illness, injury, or developmental delay reach their highest level of independence in their daily occupations. Occupations include the tasks and activities required to fulfill one's life roles such as student, family member, or employee. Beyond assisting people with self care skills, a certified occupational therapy assistant may teach a person who has had a head injury learn how to operate a computer with adapted equipment in order to maintain employment, or assist a child with autism to function in the school setting in order to learn. Occupational therapy serves a wide population in a variety of settings such as hospitals and clinics, rehabilitation and long-term care facilities, vocational workshops, schools, camps, private homes, and community agencies.

The Occupational Therapy Assistant program is accredited by the Accreditation Council for Occupational Therapy Education (ACOTE) of the American Occupational Therapy Association (AOTA), located at 4720 Montgomery Lane, P.O. Box 31220, Bethesda, MD 20824-1220. AOTA's phone number is (301) 652-AOTA. Graduates of the program are eligible to sit for the national certification examination for the occupational therapy assistant administered by the National Board for Certification in Occupational Therapy (NBCOT). After successful completion of this exam, the individual will be a certified occupational therapy assistant (COTA). Most states require licensure in order to practice; however, state licenses are usually based on the results of the NBCOT Certification Examination.

All accepted students must undergo a Criminal Offender Record Information or other check. Depending on the findings, the student may not be allowed to continue in the program of study. For further information, please contact the office of the Dean of Health. A felony conviction may affect a graduate's ability to sit for the NBCOT certification examination or attain state licensure. Please contact NBCOT at 301/990-7979 or see www.nbcot.org for more information.

The certified occupational therapy assistant will be able to provide direct service to the client under the supervision of a Registered Occupational Therapist. Supervision is dependent on the specific service provided and the competency of the occupational therapy assistant.

The occupational therapy assistant curriculum prepares the graduate to participate in a comprehensive health care plan for the consumer. A three-fold program is utilized: prevention, remediation, and compensation for daily life tasks. The student must complete one semester in supervised clinical education, which will require travel and related expenses. All clinical education must be completed within 20 months of the didactic coursework.

Clinical education is an integral part of the occupational therapy assistant program curriculum. The clinical component is based on contracts negotiated with area health care facilities. It should be noted that not all students will have clinical placements confirmed prior to graduation. Some students may need to attend clinical affiliation during the summer.

Admission Standards and Criteria

Applicants must be high school graduates or hold a certificate of equivalency. Applicants must have completed high school algebra 2, biology, and chemistry, both with labs. Candidates can waive the SAT criteria if they can document a 3.0 or better QPA in at least 15 college credits, including English Composition, with no grade lower than a "C" (2.0). Along with the application, candidates must submit a letter of intent discussing why they wish to be an occupational therapy assistant. On the STCC placement tests, students must demonstrate competencies for algebra 2 and admission to college-level English (ENGL-100). Students must also have a physical exam which states that they are physically fit for the program and subsequent clinical affiliations.

Minimum Grade Requirement

Occupational therapy assistant students must achieve a minimum grade of "C" (73%) or better in each occupational therapy course. In addition, students must attain a minimum grade of "C" (73%) or better in all required courses, including transfer credits. The student who is unable to meet this minimum requirement will be withdrawn from the program. Application for reentry will be based on the recommendation of the Department Chair.

Upon successful completion of the requirements listed below, the degree of **Associate in Science in Occupational Therapy Assistant** will be awarded.

SEMESTER 1

No.	Course Title	Class	Lab	Credits
ENGL-100	English Composition 1	3		3
OCCP-100	Occup. Therapy Asst.1	3	4	5
PSYC-100	General Psychology	3		3
BIOL-132	Anatomy & Physiology 1	3	2	4
		12	6	15

SEMESTER 2

OCCP-200	Occupational Therapy Assistant 2	3	4	5
OCCP-201	Physical Pathology	3		3
OCCP-202	Movement and Function	1	2	2
BIOL-232	Anatomy and Physiology 2	3	2	4
		10	8	14

SUMMER 1

PSYC-325	Lifespan Human Growth & Development	3		3
SOCL-100	Introduction to Sociology	3		3
ENGL-200	English Comp. 2: Intro. to Literature	3		3
		9		9

SEMESTER 3				
MAST-211	Health Science 3 *(7 wks 1-2-1)*	.5	1	1
OCCP-300	Occupational Therapy Assistant 3	3	4	5
OCCP-301	Psychosocial Pathology	3		3
OCCP-302	Occupational Therapy Media	2	2	3
HCAR-300	Current Issues Across the Continuum of Care	3		3
		11.5	7	15
SEMESTER 4				
OCCP-400	Occupational Therapy Assist. Seminar	2		2
OCCP-411	Occupational Therapy Assistant Practicum 1 *(8 wks 0-40-5)*		20	5
OCCP-412	Occupational Therapy Assistant Practicum 2 *(8 wks 0-40-5)*		20	5
		2	40	12

Physical Therapist Assistant PTAS.AS

Associate Degree Program

The STCC Physical Therapist Assistant program, one of the oldest and highly regarded accredited programs in the country, is housed in the newly-renovated ground floor clinic area of Building 20.The program prepares men and women for employment in the physical therapy field. The job market in this region is strong. The U.S. Department of Labor, Bureau of Labor Statistics, in their Occupational Outlook Handbook, lists physical therapy as one of the fastest-growing professions through 2012.

The graduate physical therapist assistant (PTA) is a technical health care provider who works under the supervision of a physical therapist. The PTA performs movement-related activities and therapeutic techniques for patients with burns, amputations, spinal cord injuries, and cardiac, neurologic and orthopedic injuries. Such techniques include therapeutic exercise; gait training; heat and cold applications; massage; and the use of assistive, prosthetic, orthotic, and electrical devices that improve the independence of people with congenital, traumatic, or disease-related processes.

The two-year curriculum leading to an Associate Degree follows the guidelines adopted by the American Physical Therapy Association (APTA). The curriculum is designed to develop technical and clinical knowledge and skills combining anatomy, physiology, kinesiology, disease processes, psychological and interpersonal relations. Emphasis is placed on ethical and legal considerations. Approximately one semester of the program is supervised practice in selected clinical settings. In addition, students have an opportunity to enhance learned skills under faculty supervision in the Campus Rehabilitation Clinic at STCC. The program is fully accredited by the Commission on Accreditation in Physical Therapy Education of the American Physical Therapy Association.

Admission Standards and Criteria The PTA program is a competitive academic program with rigorous standards. To be admitted to the program, an applicant must have a high school diploma or GED; four years of high school English with

no grade lower than a "C"; algebra 2 level math, biology with lab, and chemistry with lab, all with no grade lower than a "C." Also required is competency in medical terminology, determined by successful completion of a suitable course; successfully passing a medical terminology challenge exam in the Testing Center; or waiving of this requirement by the department chair with evidence of a healthcare background. Applicants must demonstrate an understanding of and commitment to physical therapy by documenting 25 hours of observation in at least two different physical therapy settings, or through related work experience, approved by the department chairperson. An applicant must have scored around 450 on each (verbal and math) section of the SAT1 exam. Candidates can waive the SAT criteria if they can document a 3.0 or better QPA in at least 15 college credits, including English Composition, with no grade lower than a "C."

Applicants can strengthen their candidacy by achieving high SAT1 scores, maintaining high grades in high school or high QPAs in college courses, successfully completing college courses in related academic areas prior to application, and providing documentation of related observation or work in the field. Applicants to the PTA program should be aware that this is a physically demanding occupation, often requiring lifting and supporting of heavy patients. Good communication skills, both oral and written, are essential to satisfactory functioning as a physical therapist assistant. Additional information may be obtained by calling the program director at (413) 755-4844.

All accepted students must undergo a Criminal Offender Record Information or other check. Depending on the results, the student may not be allowed to continue in the program of study. For further information, please contact the office of the Dean of the School of Health.

Minimum Grade Requirement: The Physical Therapist Assistant student must obtain a minimum grade of "C" (73%) in all required courses. In addition to this requirement, the student must have earned a minimum of 66 credits with a cumulative quality point average of 2.0 in order to be eligible for graduation. Without exception, failed courses in the PTA curriculum require that the student is withdrawn from the program. The student must then re-apply to the program in order to be re-admitted. This privilege may be used only once, and is based on available space.

It should be noted that a student must satisfactorily complete Anatomy & Physiology courses (BIOL-132, BIOL-232) before entering the third semester. All course work must be completed before the clinical affiliation in the fourth semester.

Proof of satisfactory completion of the PTA program, with diploma, is required for clinical practice. The graduate PTA may apply to sit for the national licensure examination. Successfully passing this exam is a requirement for licensure in Massachusetts and most other states.

Transfer to Physical Therapy Programs: Occasionally, graduates of the STCC PTA program may be interested in expanding their education to the Physical Therapist (PT) level. While some PTA skills courses will not transfer as comparable PT courses, some accelerated programs offer exceptional credit to the practicing PTA. Two such programs, leading to the Doctor of Physical Therapy degree, are located in the Springfield area.

Curriculum: Upon the successful completion of the requirements for this program, as listed below, the degree of **Associate in Science** in **Physical Therapist Assistant** will be awarded.

SEMESTER 1

No	Course Title	Class	Lab	Credits
PTAS-100	Phys. Therapist Asst. 1	2	4	4
ENGL-100	English Composition 1	3		3
BIOL-132	Anatomy & Physiology 1	3	2	4
PSYC-100	General Psychology	3		3
PTAS-101	Intro. to Physical Therapy *(7 wks 2-0-1)*	1		1
MAST-211	Health Science 3 *(7 weeks)*	.5	1	1
		12.5	7	16

SEMESTER 2

PTAS-200	Kinesiology	3	2	4
PTAS-201	Phys. Therapist Asst. 2	2	4	4
PTAS-202	Fundamentals of Measurement Skills	1	2	2
BIOL-232	Anatomy & Physiology 2	3	2	4
HCAR-350	Pathological Conditions	3		3
		12	10	17

SUMMER

ENGL-200	English Comp. 2: Intro. to Literature	3		3
SOCL-100	Introduction to Sociology	3		3
		6		6

SEMESTER 3

HCAR-300	Current Issues Across Continuum	3		3
PTAS-306	Neurologic Treat. App./Integ. Prac.	2	2	3
PTAS-307	Introductory Supervised Clinical Exp.		3	1
PTAS-308	Orthopedic Treatment Procedure	2	4	4
PSYC-325	Lifespan Human Growth and Devel.	3		3
		10	9	14

SEMESTER 4

PTAS-402	Physical Therapist Asst. Seminar	1		1
PTAS-403	Supervised Clinical Exp. *(7 wks 0-40-6)*		20	6
PTAS-404	Supervised Clinical Exp. *(7 wks 0-40-6)*		20	6
		1	40	13

Respiratory Care

RSPC.AS

Associate Degree Program

Respiratory Care is a health specialty involved in the treatment, management, diagnosis and care of patients with cardiopulmonary dysfunction. The respiratory care practitioner is an expert in the use of therapeutic gases, ventilatory support, bronchopulmonary drainage, breathing exercises, cardiopulmonary resuscitation, aerosol administration, hyperinflation therapy, medications, humidification, and maintenance of natural, artificial, and mechanical airways. Respiratory care practitioners are also involved in diagnostic testing, monitoring, treatment,

education, sales, and research. These include the measurement of lung volumes, pressures, flows, blood gas analysis, electrocardiograms, stress testing, sleep studies, smoking cessation, pulmonary rehabilitation, asthma, and disease management.

Respiratory care offers the chance to work closely with patients and other health care practitioners in a career which is both personally and financially rewarding.

The graduate practitioner will find work in hospitals which operate 24 hours a day. Increasingly, however, there are career opportunities in private homes, with medical equipment supply companies, in home health agencies, and in physicians' offices. Once you enter the profession you may want to specialize in an area such as neonatal care, critical care, helicopter transport, rehabilitation, education, cardiopulmonary diagnostics, or management.

This program is sponsored by the College in cooperation with area hospitals, pulmonary rehabilitation programs, long-term care facilities, and home care agencies. The program is fully accredited by the Committee on Accreditation for Respiratory Care (COARC) in conjunction with the Commission on Accreditation of Allied Health Education Programs (CAAHEP).

The curriculum includes a summer session.

1.) **Admission Requirements**

High school graduate or equivalent

PREREQUISITES: College Algebra 2 (ALGB-099, 3 credits, or its equivalent), biology and chemistry

College placement tests, reading tests (mandatory), and SAT1 (highly recommended)

Students must submit a required health form prior to September 1 in the year of their initial enrollment

Any disabilities must be within safe limits for both students and patients. It should be noted that the affiliating hospitals require by contract proof of satisfactory health, and reserve the right to refuse affiliation for students. Therefore, health status is subject to contract terms.

Students' physical and mental ability must withstand the vigorous demands of respiratory care (i.e., be able to move patients and work under stress.)

2.) **Academic Requirements**

No grade lower than a "C" (73%) will be accepted toward graduation in respiratory care. Students not meeting this grade requirement in any course will be withdrawn from the program. Failure in an affiliation course will result in dismissal from the program. Grades of less than "C" will not be accepted in transfer.

The following clinical lab courses may have a 7:00 a.m. starting time, or a 3:00 p.m. starting time that lasts until 11:00 p.m.

RSPC-216 Respiratory Care Practicum 1
RSPC-311 Respiratory Care Practicum 2
RSPC-410 Respiratory Care Practicum 3

All accepted students must undergo a Criminal Offender Record Information or other check. Depending on the findings, the student may not be allowed to continue

in the program of study. For further information, please contact the office of the Dean of the School of Health.

Upon successful completion of requirements for this program, as listed below, the degree of **Associate in Science in Respiratory Care** will be awarded.

SEMESTER 1

No.	Course Title	Class	Lab	Credits
RSPC-104	Introduction to Respiratory Care	3		3
RSPC-105	Respiratory Care 1	3	2	4
ENGL-100	English Composition 1	3		3
BIOL-132	Anatomy & Physiology 1	3	2	4
BIOL-140	Biochemistry	3		3
		15	4	17

SEMESTER 2

RSPC-205	Respiratory Care 2	3	2	4
RSPC-207	Respiratory Care 3	3		3
LIBR-100	Library Exploration	1		1
ENGL-200	English Comp. 2: Intro. to Lit.	3		3
BIOL-232	Anatomy & Physiology 2	3	2	4
MAST-211	Health Science 3 *(7 wks 1-2-1)*	.5	1	1
MAST-206	Venipuncture *(7 wks 1-2-1)*	.5	1	1
		14	6	17

SUMMER (8 Weeks)

RSPC-215	Respiratory Care 4 *(4-0-2)*	2		2
RSPC-216	Resp. Care Practicum 1 *(0-20-4)*		10	4
BIOL-121	Microbiology	3	3	4
		5	13	10

SEMESTER 3

RSPC-303	Intensive Respiratory Care	3		3
RSPC-305	Pulmonary Function Testing	3		3
RSPC-306	Resp. Care Applications/Clin. Sci.1	2		2
RSPC-310	Respiratory Care 5	3		3
RSPC-311	Respiratory Care Practicum 2		16	4
		11	16	15

SEMESTER 4

RSPC-410	Respiratory Care Practicum 3		23	5
RSPC-411	Resp. Care Applications/Clin. Sci. 2	1		1
RSPC-409	Neonatal and Pediatric Care	3		3
RSPC-408	Respiratory Care 6	3		3
PSYC-100	General Psychology	3		3
		10	23	15

Surgical Technology SURG.AS

Associate Degree Program

The Certified Surgical Technologist (CST) works primarily in the operating room suite as an integral member of the surgical team with surgeons, anesthesiologists, registered nurses, and other surgical technologists in delivering patient care and assuming appropriate responsibilities before, during, and after surgery. This is a highly demanding, challenging, and rewarding career.

In most positions, the CST is required to be on call or rotate to weekends, holidays, and off-shifts.

Job Forecast:

According to the U.S.Department of Labor, Bureau of Labor Statistics, "Employment of surgical technologists is expected to grow faster than the average for all occupations through the year 2012 as the volume of surgery increases. The number of surgical procedures is expected to rise as the population grows and ages. As the 'baby boom' generation enters retirement age, the over-50 population will account for a larger portion of the general population. Older people require more surgical procedures. Technological advances, such as fiber optics and laser technology, will also permit new surgical procedures to be performed."

The Role of the Certified Surgical Technologist:

Before the operation, the CST prepares the OR by supplying it with the appropriate supplies and instruments. Other pre-operative duties include adjusting and testing equipment, preparing the patient for surgery, and helping to connect surgical equipment and monitoring devices. The CST, usually the first member of the OR team to "scrub" and put on gown and gloves, prepares the sterile setup for the appropriate procedure, and assists other members of the team with gowning and gloving. CSTs spend approximately 10%-15% of their time preparing for procedures.

During the operation, CSTs have primary responsibility for maintaining the sterile field. In order that surgery may proceed smoothly, CSTs anticipate the needs of surgeons, passing instruments and providing sterile items in an efficient manner. As directed by the surgeon, CSTs may sponge or suction the operative site, prepare suture material, dispense appropriate fluids and drugs, and prepare specimens for subsequent pathologic analysis. CSTs spend approximately 70%-80% of their time in the scrub role.

After the operation, CSTs are responsible for applying dressings, assisting with room and equipment breakdown, and then preparing the OR for the next patient. CSTs spend approximately 10% of their time performing after-case responsibilities.

Traits of the Certified Surgical Technologist:

The successful CST likes biology, especially anatomy and physiology, wants to help people, works well in stressful conditions, moves easily from task to task, concentrates for long periods, is a team player, and is physically able to stand for long periods of time.

Career Path for the Certified Surgical Technologist:

The role of the CST has expanded greatly over the last 10-20 years. Some hospitals have a career ladder that allows the CST to advance without further education. The path each graduate takes is individual and frequently changes over time. The OR has 10 surgical specialties that allow the CST to diversify without changing jobs or needing to further his or her education. This career does allow (depending on the employer) flexible hours that allow for family time or pursuit of other endeavors. The following is a partial list of some of the roles graduates of this program are pursuing:

- Scrub role in a major teaching facility, community hospital, or free-standing surgery center
- Manager of central processing
- Financial manager, operating room
- Private scrub, employed by a surgeon
- Veterinary surgical technologist
- Certified First Assistant (requires some additional training)
- Some graduates have returned to school to become RNs or Physician Assistants

Overview of Program:

This program combines core courses in biological sciences, humanities, the specialty of surgical technology, and the role of the technologist. Supervised clinical practice in hospitals, surgical processing services, and operating rooms provide experiences to prepare for entry level positions in hospital operating rooms and free-standing surgical centers. Surgical Technology courses cover the care and safety of patients during surgery, aseptic techniques, and surgical procedures. Students also learn to sterilize instruments; prevent and control infection; and handle special drugs, solutions, supplies, and equipment. The experiences in the OR lab at STCC prepare the student for the clinical pracicum. This is a very demanding program of study.

Accreditation of Program/National Credentialing of the Graduate:

This program is fully accredited by the Commission on Accreditation of Allied Health Education Programs (CAAHEP) in conjunction with the Accreditation Review Committee on Education in Surgical Technology. Graduates of the program are eligible to apply for the national certifying examination in Surgical Technology (CST) given by the Association of Surgical Technologists.

Admission and Retention Requirements:

An interview with the program director is required. Applicants must be high school graduates or the equivalent, with successful completion of courses in biology, chemistry, and algebra 2. These courses are required for taking Anatomy & Physiology and Microbiology. Developmental courses are available at STCC to meet these prerequisites. All students must achieve a math level of ALGB-093, a reading level of READ-105, and an English level of ENGL-100 on the College Placement Test. Medical Terminology (MAST-101) is also a prerequisite. If this is not taken as a prerequisite, it must be taken during the first semester.

All accepted students must undergo a Criminal Offender Record Information or other check. Depending on the findings, the student may not be allowed to continue

in the program. For further information, please contact the office of the Dean of the School of Health.

A minimum of 2.0 QPA is required in the first year to continue in the program. Students may not take the second year courses until first year biological sciences and surgical technology courses are completed. Surgical technology courses must be taken in sequence.

The following courses require a minimum of the grades stated:

Anatomy and Physiology C
Microbiology C
Surgical Technology - all courses C

Health Requirements:

A required health form must be completed prior to enrollment, complete with required immunizations. Prophalaxis against Hepatitis B is also required. Any health limitations must be within safe limits for both students and patients.

The work in the operating room requires the ability to work on your feet, manual dexterity with fine coordinated motor skills, a stable temperament, attention to detail, and a strong sense of responsibility and integrity. Lifting patients and heavy equipment is part of the work.

Special Scheduling:

It should be noted that the clinical experience in the operating room is scheduled to begin at 6:45 a.m. and the afternoon shift may be used, rather than the routine College schedule. This will involve laboratories in SURG-104, SURG-208, SURG-307, and SURG-409. Clinical time is scheduled to provide learning opportunities.

Upon successful completion of requirements for this program, as listed below, the degree of **Associate in Science in Surgical Technology** will be awarded.

SEMESTER 1

No.	Course Title	Class	Lab	Credits
SURG-104	Intro. to Surgical Technology 1	4	4	6
ENGL-100	English Composition 1	3		3
BIOL-132	Anatomy & Physiology 1	3	2	4
CMPA-100	Intro. to Computers, Email and Windows *(or)*			
CMPA-101	Intro. to Word Processing	3		1
		13	6	14

SEMESTER 2

SURG-204	Principles and Practice of Surgical Technology	4		4
SURG-207	Practices Common to Surgical Procedures		4	2
SURG-208	Clinical Practice in Surgery 1		8	2
BIOL-232	Anatomy & Physiology 2	3	2	4
	Elective: Social Science	3		3
		10	14	15

SUMMER 1				
BIOL-121	Microbiology *(8 weeks)*	3	3	4
SEMESTER 3				
SURG-306	Common Health Problems and Surgical Specialties 1	4		4
SURG-307	Clinical Practice in Surgery 2		21	5
SURG-308	Pharmacology and Pathology	2		2
SURG-309	Role of the Surgical Technologist 1	1		1
ENGL-200	English Comp. 2: Intro. to Lit. *(or)*			
WRIT-202	Technical Report Writing	3		3
		10	21	15
SEMESTER 4				
SURG-403	Role of the Surgical Technologist 2	2		2
SURG-408	Common Health Problems and Surgical Specialties 2	4		4
SURG-409	Clinical Practice in Surgery 3		24	6
		6	24	12

For students for whom English is a second language, Medical Terminology is useful in both biology and Surgical Technology courses.

Liberal Arts Transfer and General Studies

STCC's fine arts program includes a full spectrum of studio classes, ranging from traditional foundation-level courses through experimental computer imaging. Student work is shown at the end of the semester in the Amy H. Carberry Fine Arts Gallery, which presents seven major exhibits each year, featuring works by artists of local and national repute.

General Studies LTGS

The General Studies Department services a large population of students who are headed in different directions academically. To accommodate the various transfer needs of these students, the department has several program options. In each option there are courses listed which will assist the students to complete the requirements necessary for the General Studies Transfer degree or another on-campus program of choice.

There is a very flexible curriculum leading to the transfer degree. This curriculum includes requirements which will transfer as liberal arts courses at four-year colleges. Because of the number of general electives included in the curriculum, students may enroll in additional courses of choice from the humanities, social sciences, math, and sciences departments. An additional benefit of the general elective courses is that courses from other schools on campus (Business and Information Technologies, Engineering Technologies, or Health) will count toward the degree and will transfer under the Commonwealth Transfer Compact agreement we have with the four-year state colleges and the University of Massachusetts.

Since many General Studies students are seeking acceptance into other on-campus degree programs, the department offers several other preparatory curriculum options. These options allow students to complete course prerequisites necessary to gain acceptance into their on-campus department of choice. One of the options is the Bilingual program which helps students develop their English language skills. All options, which have been updated to reflect students' priorities, are listed below with designated codes.

In addition, the department advises students who are undecided about specific academic or career direction. Professional advisors or faculty advisors assist students with their course schedules while suggesting other resources on campus to assist them to explore future educational endeavors.

The General Studies cores reflect these student priorities, offering curriculum and support services in program options as follows:

LTGS.AA —**Transfer Option:** for the student electing one of the degree or transfer programs

- Commonwealth Transfer Compact Option
- University Without Walls Option

HTHC.GS —**Pre-Health Options:** for the student contemplating application to a program in the School of Health

ENTC.GS —**Pre-Engineering Technologies Option:** for the student contemplating application to a program in the School of Engineering Technologies

ENGC.GS — **Pre-Engineering/Science Transfer Option:** for the student planning to major in the Science Transfer Option or to prepare for the Engineering Transfer program of the College

BUSC.GS — **Pre-Business Option:** for the student planning application to a program in Business, Computer Information Technologies, or Office Information Technologies

LECJ.GS — **Pre-Law Enforcement Option:** for the student planning to gain acceptance into the Law Enforcement program

BLNG.GS — **Bilingual Program:** for students who need to develop English language skills, an intensive and accelerated curriculum in English As a Second Language, as well as transitional courses in mathematics and biology, with related counseling and support services

UNDC.NM — **Non-Matriculating Option:** for students not currently seeking acceptance into a program

Assessment and Placement Testing

Both transfer and career programs require effective reading comprehension and English skills as well as a foundation in mathematics and science. Therefore, course assignments in these areas are based on the student's performance in a series of placement examinations taken after acceptance, but prior to scheduling and registration. Placement tests in mathematics, English, vocabulary development and reading comprehension are required of all entering students. It must be noted that, as prerequisites for college-level work, some courses may be required that are not acceptable toward the General Studies degree. Listed below are the developmental courses available which may be required as prerequisites for college-level work.

ERDG- 081, 084, 087	Effective Reading for Bilinguals
ERDG-091, 092	Reading Level 1, 2
DWRT-099	Review for College Writing
EESL-080, 083, 086	English as a Second Language I, II, III
ECNV-082	Basic English Conversational Skills I (Bilingual)
ECNV-085	Basic English Conversational Skills II (Bilingual)
EWRT-088, 093	Basic Writing Skills for Bilinguals
ARTH-071-073, 078	Basic Arithmetic
ALGB-081-083, 087	Elementary Algebra
ALGB-091-093, 097	Intermediate Algebra
BIOL-090	Basic Science II: Introduction to Biology

Academic Advising and Counseling

General Studies advising staff and faculty advisors assist students in making academic decisions, pursuing program objectives, completing graduation requirements, or intra-college transfers to a career program. Students should refer questions to their assigned advisor.

General Studies Program Information Booklet

Published yearly, this booklet summarizes pertinent information about school procedures, and serves as the student's personal record of courses completed toward a degree or intra-college transfer.

COMMONWEALTH TRANSFER COMPACT OPTION **LTGS.AA**

Minimum requirements for the degree of Associate in Arts in Liberal Arts/General Studies:

English Communications:

English Composition 1	3 credits
English Composition 2	3 credits

Mathematics/Sciences:

ONE college-level, transferable course in Mathematics	3 credits
TWO college level, transferable courses in the Sciences	8 credits

Behavioral/Social Sciences:

Introduction to Sociology (SOCL-100)	3 credits
General Psychology (PSYC-100)	3 credits
ONE of the following:	
Economics 1	
History or Political Science or	
Cultural Anthropology Elective	3 credits

Humanities/Fine Arts restricted to the following areas:

TWO courses selected from:	
Art	
College Theater	
Foreign Language	
Music	
Philosophy	6 credits
ONE Literature Elective	3 credits

General Electives:

EIGHT OR NINE college-level, non-developmental courses selected from the curriculum in Humanities, Mathematics, Natural or Social Sciences, OR from the degree requirements of another College program.	25-27 credits

MINIMUM OF 60 CREDITS REQUIRED

RECOMMENDED COURSE SEQUENCE

The following sequence is recommended; however, additional semesters may be required for students whose placement scores and/or high school background indicate a need to complete prerequisites for specific college-level courses.

SEMESTER 1

No.	Course Title	Class	Lab	Credits
ENGL-100	English Composition 1	3		3
SOCL-100	Introduction to Sociology	3		3
	Elective: Humanities (Note 1)	3		3
	Elective: General	3		3
	Elective: Mathematics (Note 2)	3		3
		15		15

SEMESTER 2				
ENGL-200	English Composition 2	3		3
PSYC-100	General Psychology	3		3
	Elective: General	3		3
	Elective: Humanities (Note 1)	3		3
	Elective: Lab Science	3	3	4
		15	3	16
SEMESTER 3				
	Elective: Humanities (Note 3)	3		3
	Elective: Social Science (Note 4)	3		3
	Elective: Lab Science	3		4
	Elective: General	3		3
	Elective: General	3		3
		15		16
SEMESTER 4				
	Elective: General	3		3
	Elective: General	3		3
	Elective: General	3		3
	Elective: General	3		3
	Elective: General	3		1-3
		15		13-15

Note 1: Restricted to art, college theater, foreign languages, music, or philosophy

Note 2: MATH-101 or higher

Note 3: Restricted to literature electives

Note 4: Restricted to history, cultural anthropology, economics, or political science electives

NOTE: All courses presented for degree must be non-developmental and college-level to total 60 semester hours.

Upon the successful completion of requirements for this program, as listed above, the degree of **Associate in Arts in Liberal Arts/General Studies** will be awarded.

UNIVERSITY WITHOUT WALLS TRANSFER OPTION UWWL.AA

The University Without Walls is an adult bachelor's degree program of the University of Massachusetts in which students design an individualized degree in a field of their choice, and have the option of converting learning from life experience into academic credit.

The University Without Walls transfer option (UWWL.AA) of the General Studies associate degree provides adult learners with the opportunity to complete UMass general education requirements; develop critical reading, writing and thinking skills; and make connections between a liberal arts education and life experience. This option is ideal for adults who have career and life experiences and who are interested in a four-year degree, but have few or no college credits. This program is under the Commonwealth Transfer Compact. Students who graduate from this

General Studies Option with a grade point average of 2.5 or better will be accepted into the University Without Walls, or into any state institution of higher learning.

Students enrolled in this option become part of the larger Springfield Center University Without Walls student body, and are invited to participate in UWW social events and workshops, receive periodic mailings and newsletters from UWW, and maintain contact with the UWW advisors at STCC. For more information, contact the UWW Coordinator, Garvey Hall, Room 267, STCC, at 732-5262.

PROGRAM REQUIREMENTS

Minimum of 60 credits for the associate degree program in General Studies

Because most students in the University without Walls option will be part time, the required courses are not listed in semester sequence. It is recommended, however, that students complete ENGL-100 English Composition 1, as early as possible in their program.

		Credits
English		
ENGL-100	English Composition 1	3
ENGL-200	English Composition 2	3
Humanities		
	Literature elective	3
	Two electives in art, philosophy, music, theater, or foreign language	6
Social Sciences		
	History elective	3
PSYC-100	General Psychology	3
SOCL-100	Introduction to Sociology	3
Science and Math		
	Lab science elective	4
	College math elective	3
	Lab science or college math elective	3 or 4
Analytical Reasoning (one of the following)		
CMPA-103	Microcomputer Applications for Windows	3
PROG-101	Computer Concepts	4
STAT-142	Statistics	3
BSTS-143	Business Statistics	3
MATH-155	Calculus	4
Diversity		
In addition to SOCL-100, students must take one more course that involves studies of diverse cultures outside of the U.S. This requirement can be met through the following courses which also fulfill requirements in social sciences or humanities		
SOCL-110	Introduction to Anthropology	3
ENGL-351	Non-Western Literary Voices	3
HIST-300	History of Civilization to 1650	3
HIST-440	Far Eastern Civilization	3

The remaining 25 credits may be earned through elective courses. Students may pursue courses in a particular field of interest or continue with a liberal arts program.

Upon successful completion of requirements for this program, as listed above, the degree of **Associate in Arts in Liberal Arts/General Studies** will be awarded.

PRE-HEALTH OPTIONS HTHC.GS

To prepare for a program in the School of Health, you should take a schedule that reflects the course prerequisites as stated in this catalog, and your achievement on the STCC Placement Tests (CPT.)

Your first semester schedule should include:

English Math	Based on placement test scores, to develop the level of basic skills needed for success in health studies
Reading	If placement on the CPT in Reading indicates a serious need for remediation
Basic science or chemistry or physics	As required by your intended program and your academic profile, that is, high school background in science, STCC placement scores, SAT1 math and verbal scores

The following courses should be completed by all students heading toward the a program in health sciences, dental, or nursing.

(This first semester of courses is also required for the Health Aide Option, next page.)

Semester 1

ENGL-100	English Composition 1	3 credits
HCAR-110	Health Directions Seminar	3 credits
CMPA-103	Microcomputer Applications for Windows	3 credits
BIOL-148	Basics of Anatomy & Physiology *(or)*	
BIOL-132	Anatomy & Physiology *(see Semester 2 to choose the proper biology course)*	4 credits
		13

Semester 2 - **Health Sciences Option**

WRIT-202	Technical Report Writing	3 credits
MAST-101	Medical Terminology	3 credits
	Career course	3 credits
	Career course	3 credits
	Career course (*BIOL-232 if BIOL-132 was taken in Semester 1)*	3-4 credits
		15-16

Total credits semester 1+2=28-29

Semester 2 - **Nursing Option**

ENGL-200	English Composition 2	3 credits
BIOL-232	Anatomy & Physiology 2	4 credits
PSYC-100	General Psychology	3 credits
SOCL-100	Introduction to Sociology	3 credits
NURS-099	Basic Medication Calculations *(non-college level)*	3 credits
	Total college-level credits	13
	Total credits semester 1+2	26

This curriculum is a guide, but should be followed unless a student has a signed letter of agreement from a School of Health department/program chair that states specific alternate courses that must be taken for acceptance into a health program. Please note: completion of this program of study **does not** guarantee acceptance into a Health program.

HEALTH AIDE OPTION

For Semester 1 courses, see the Pre-Health option on the previous page.

Semester 2 - **Office Option** **HTHC.COC**

WRIT-202	Technical Report Writing	3 credits
MAST-101	Medical Terminology	3 credits
MAST-220	Administrative Skills for the Medical Assistant	3 credits
	Career course	3 credits
	Career course	3-4 credits
	Total credits	15-16
	Total credits semester 1+2	28-29

Upon completion of these requirements, a **Certificate of Completion in Health Aide** from STCC will be awarded.

PRE-ENGINEERING TECHNOLOGIES OPTION ENTC.GS

To prepare for a program in the Engineering Technologies, you should take a schedule that reflects the course prerequisites as stated in this catalog, and your achievement on the STCC Placement Tests (CPT.)

Your first semester schedule should include:

English Math	Based on placement test scores, to develop the level of basic skills needed for success in technical studies
Reading	If placement on the CPT in Reading indicates a serious need for remediation
Basic science or chemistry or physics	As required by your intended program and your academic profile, that is, high school background in science, STCC placement scores, SAT1 math and verbal scores
Social science elective or College Success Seminar	Required by most technology programs

The following courses should be completed by all students heading toward an engineering technology program:

CMPA-103	Microcomputer Applications for Windows	3 credits
ESET-100	Introduction to Engineering Technologies	2 credits
ESET-107	Introduction to Technology Systems	2 credits
BMDL-120	Intro. to Bio-Med	3 credits
ENGY-132	Engineering Graphics	2 credits
	Elective: Technical	3 credits
		15

PRE-ENGINEERING/SCIENCE TRANSFER OPTION ENGC.GS

If you are preparing for Engineering and Science Transfer, and your schedule reflects the prerequisites as stated in this catalog, as well as your achievement in the STCC placement tests, then your first semester should include:

English Math	Selection based on placement test scores to develop the level of basic skills needed for success in engineering or science majors
Reading	If placement on the CPT in Reading is at Reading Level 1 (DRDG-091) or Reading Level 2 (DRDG-092)
Basic Science or Chemistry or Physics	As required by your academic profile, that is, high school background in science, STCC placement scores, SAT 1 math and verbal scores

College Success Seminar

PRE-BUSINESS/INFORMATION TECHNOLOGY OPTION BUSC.GS

Students preparing for a program in Business Administration, Computer information Technology, or Office Information Technology should take a schedule of courses that reflects the course prerequisites as stated in this catalog and your achievement on the STCC Placement Test (CPT.) Your first semester schedule should include:

English Math	Selection based on placement test scores to develop the level of basic skills needed for success in a service program
Reading	If placement on the CPT in Reading indicates a serious need for remediation.
PSYC or SOCL	One per semester only. Placement at English Composition 1 is required. These are required in most degree programs.

Humanities elective OR general elective OR College Success Seminar

The following courses should be completed by all students heading toward these programs.

Pre-Business Option

ACCT-110	Accounting 1	4 credits
ACCT-210	Accounting 2	4 credits
CMPA-103	Microcomputer Applications for Windows	3 credits
FINC-110	Introduction to Finance	3 credits
MRKT-110	Principles of Marketing	3 credits
		17

Pre-Computer InformationTechnology Option

PROG-109	Information Systems Fundamentals	3 credits
OFFS-100	Basic Keyboarding	1 credit
CMPA-103	Microcomputer Applications for Windows	3 credits
PROG-106	Intro. to Structured Programming Using C	4 credits
PROG-313	Operating Systems	3 credits
PROG-314	Database Systems	3 credits
		17

PRE-LAW ENFORCEMENT OPTION LECJ.GS

To prepare for a program in Law Enforcement/Criminal Justice, you should take a schedule of courses that reflects the course prerequisites as stated in this catalog and your achievement on the STCC Placement Test (CPT.) Your first semester schedule should include:

English	Selection based on placement test scores to develop the level of basic skills needed for success in a service program

Reading	If placement on the CPT in Reading indicates a serious need for remediation.
PSYC or SOCL	One per semester only. Placement at English Composition 1 is required. These are required in most degree programs.

Humanities elective OR general elective OR College Success Seminar

The following courses should be completed by students heading toward this program.

LECJ-100	Criminal Procedures 1	3 credits
LECJ-110	Introduction to Criminal Justice	3 credits
LECJ-200	Criminal Procedures 2	3 credits
LECJ-230	Criminal Evidence	3 credits
LECJ-300	Criminal Law 1	3 credits
		15

BILINGUAL PROGRAM OPTION **BLNG.GS**

If you requested the Bilingual program, you will gain assistance to help you develop language skills for successful work in the program to which you intend to apply. Placement in this option is based on your score on the Test of English as a Foreign Language, and selection of the following courses will be recommended:

Effective Reading

English as a Second Language 1, 2, 3

Basic English

Conversational Skills 1, 2

Writing Skills for Bilinguals

Students are referred to the Bilingual Services Office in building 16 (Garvey Hall), room 146 for information about placement testing, scheduling, and registration.

NON-MATRICULATING OPTION **UNDC.NM**

The non-matriculating student is one who has not declared a major department from the STCC offerings. This designation offers special status for students who do not intend to pursue a degree from the college. Usually, non-matriculating students plan to transfer earned grades to another college, or are taking courses for self-enrichment. These students are not eligible for federal or state financial aid programs. Special permission may be necessary if a student wishes to take a restricted course, but a General Studies advisor will help direct the student to the appropriate faculty member.

Liberal Arts Transfer

LTTR.AA

Associate Degree Program

LIBERAL ARTS TRANSFER OPTION

The Liberal Arts Transfer curriculum is designed to parallel the first two years of a four year institution's liberal arts program. It is for students who intend to transfer to a senior college and work toward a bachelor's degree. The minimum requirements for the degree are 62 semester hours (20 courses), a minimum cumulative quality point average of 2.0, including 6 credits of English Composition, 12 credits in the Humanities, 18 credits in the Social Sciences, and 11 credits in Mathematics and Natural Sciences. Up to six credits may be earned through Cooperative Education. Upon the successful completion of requirements for this program, as listed below, the degree of **Associate in Arts in Liberal Arts Transfer** will be awarded.

SEMESTER 1

No.	Course Title	Class	Lab	Credits
ENGL-100	English Composition 1	3		3
	MATH-101-103 *or* MATH-122 *or* MATH-124 *or* MATH-132 *or* STAT-142	3		3 or 4
	Liberal Arts Elective (foreign language recommended)*	3		3
HIST-110	Survey of Early U.S. History *(or)*			
PSCI-100	American Government & Politics	3		3
PSYC-100	General Psychology	3		3
		15		15 or 16

SEMESTER 2

ENGL-200	Comp. 2: Intro. to Lit.	3		3
	Elective: History	3		3
	Liberal Arts Elective (foreign language recommended)*	3		3
	Natural Lab Science	3	3	4
SOCL-100	Intro. to Sociology *(or)*			
SOCL-110	Intro. to Anthropology	3		3
		15	3	16

SEMESTER 3

	Literature Elective	3		3
	Laboratory Science	3	3	4
	Liberal Arts Elective (foreign language recommended)*	3		3
SPCH-203	Fundamentals of Speech	3		3
ECON-100	Economics 1	3		3
		15	3	16

SEMESTER 4

	Literature Elective	3	3
	Liberal Arts Elective (foreign language recommended)*	3	3
PHIL-110	Philosophy 1 (or)		
PHIL-210	Philosophy 2	3	3
	Humanities Elective **	3	3
	Liberal Arts Elective ***	3	3
		15	15

* Liberal Arts Electives include: Math, Science, Social Sciences (except PSYC-109), Humanities, Fine Arts, and CMPA-196 (Computing in the Arts and Sciences). For those students interested in secondary education, EDUC-320 Foundations of Education may be taken.

** Humanities Electives include: Art, Music, Drama or Creative Writing. Two are needed for students planning to transfer to Westfield State College.

*** CMPA-196 Computing in the Arts and Sciences is strongly recommended.

FINE ARTS OPTION **FINE.AA**

This Fine Arts Option is designed to parallel the first two years of a four-year college's art major. Students must complete a common curriculum of liberal arts subjects (6 credits of English composition, 3 credits in math; 8 credits in lab science; 9 credits in the social sciences; which includes one history, one psychology, and one sociology course) the visual arts curriculum (6 credits of art history, 6 credits of color/design; 9 credits of fine arts drawing; 3 credits in 3D design; 9 credits of visual arts electives) and a 3-credit liberal arts elective. A sample curriculum follows:

SEMESTER 1

No.	Course Title	Class	Lab	Credits
ENGL-100	English Composition 1	3		3
ARTS-146	Design: Introduction To Art	3		3
ARTS-147	Basic Drawing	3		3
PSYC-100	General Psychology	3		3
MATH-122	Applied Mathematics 1 *(or)*			
MATH-124	Math for a Technical Society	3		3
		15		15

SEMESTER 2

ENGL-200	Comp. 2: Intro. to Literature	3		3
ARTS-246	Basic Design 2	6		3
	Studio Elective (Note 1)	3		3
ARTS-149	Drawing Composition	3		3
SOCL-100	Introduction to Sociology	3		3
		18		15

SEMESTER 3

ARTS-140	Art History: Prehistoric to Gothic *(or)*			
ARTS-346	History of Modern Art	3		3
	Studio Elective (Note 1)	3		3
ARTS-145	Figure Drawing	3		3
	History Elective	3		3
	Lab Science Elective	3		4
		15		16

SEMESTER 4

ARTS-315	3D Design	3		3
ARTS-240	Art History: Renaissance and Baroque *(or)*			
ARTS-346	History of Modern Art	3		3
	Studio Elective (Note 1)	3		3
	Lab Science Elective	3	2	4
	Liberal Arts Elective	3		3
		15	2	16

Note 1: Studio electives may be chosen from painting, print-making, photography, or imaging courses

Upon the successful completion of the requirements for this program, the degree of **Associate in Arts in Liberal Arts Transfer** will be awarded.

TEACHER EDUCATION TRANSFER OPTION **EDUC.AA**

UMass - Early Childhood and Elementary Education Licensure
WSC - Early Childhood, Elementary Education, Secondary Licensure

STCC has established joint admission with the University of Massachusetts at Amherst and Westfield State College Schools of Education. After completing the curriculum here you would transfer to the university or the state college as a junior.

Westfield State College

State licensure requires that Elementary and Early Childhood licensure students complete two majors before graduating from WSC. Your first major will be in education, and your second major in one of the liberal arts disciplines: English, history, science, math, economics, or political science in addition to others. In addition, Early Childhood majors may select psychology or an arts major. Early Childhood Education majors may also select either psychology or arts as a second major. While at STCC, you will begin working on your second major by taking three major courses from one of the liberal arts disciplines. An alternative option, open to Early Childhood and Elementary Education students, to choose Liberal Studies as your second major. The Liberal Studies student is interested in studying in a variety of fields and will complete the major by taking a mix of courses from three liberal arts disciplines. At STCC, this option will allow you to use a mix of liberal arts courses to fulfill the major course requirements.

Students seeking licensure to teach in middle or secondary school levels must choose a major subject (for which there is a teaching licensure) as their one major at WSC. These students will also need to complete the professional sequence of education courses for licensure at WSC.

University of Massachusetts

If you plan to transfer to the University of Massachusetts, please note that during the third semester of your studies at STCC you must have an education internship placement in a local elementary school or day care center. Also note that UMass students major in one liberal arts discipline and complete a minor in education.

Other colleges

If you are interested in obtaining licensure in teacher education at a four-year college other than UMass or Westfield State, it is essential that you decide on the college to which you wish to transfer early in your career here. Obtain a catalog from the other college and bring it to your advisor for an advisor meeting. If you are undecided regarding a four-year college, you may wish to major in Liberal Arts Transfer (LTTR.AA) here, especially if you intend to go into secondary education.

Elementary and Early Childhood Licensure
UMass *or* Westfield State College

SEMESTER 1

No.	Course Title	Class	Lab	Credits
ENGL-100	English Composition 1	3		3
MATH-126	Mathematical Reasoning	3		3
PSYC-100	General Psychology	3		3
BIOL-102	Principles of Biology 1	3	3	4
HIST-110	Survey of Early U.S. History & Gov.	3		3
		15	3	16

SEMESTER 2

ENGL-200	English Composition 2	3		3
MATH-127	Mathematical Explorations	3		3
MUSC-130	Music Appreciation	3		3
HIST-300	History of Civilization to 1650	3		3
PHYS-125	Physical Science	3	3	4
		15	3	15

SEMESTER 3

BIOL-142	Introductory Nutrition	3		3
PSYC-305	Child Psychology	3		3
ARTS-146	Design: Introduction to Art (Note 1) *(or)*			
ARTS-140	Art History:Prehistoric to Gothic *(or)*			
ARTS-240	Art History:Renaissance and Baroque	3		3
ENGL-305	Children's Literature	3		3
SPAN-121	Elementary Spanish 1 (Note 2 UMass) *(or)*			
FREN-124	Elementary French 1 (Note 2 UMass) *(or)*			
	Major course (WSC)	3		3
		15		15

SEMESTER 4

ECON-100	Principles of Economics 1	3	3
ENGL-302	American Literature: 1620-1860 *(or)*		
ENGL-402	American Literature: 1860-Present	3	3
	Major course (Note 3)	3	3
SPAN-221	Elementary Spanish 2 (Note 2 UMass) *(or)*		
FREN-224	Elementary French 2 (Note 2 UMass) *(or)*		
	Major course (Note 3 WSC)	3	3
EDUC-320	Foundations of Education: Urban Perspectives (UMass) (WSC) *and*	3	3
EDUC-100	Education Internship (UMass) (WSC)	3	3
		18	18

Note 1: Students may substitute THTR-312 College Theater Workshop

Note 2: Another foreign language may be taken through the Cooperating Colleges of Greater Springfield

Note 3: Areas of concentration include: biology, chemistry, physics, general science, mathematics, English/theater arts, French, Spanish, economics, history, political science, psychology, sociology, women's studies, multicultural and ethnic studies. Students at WSC will be required to earn 18 credits in one of these areas to complete a Liberal Studies major.

Westfield State College
Secondary Licensure Program

SEMESTER 1

No.	Course Title	Class	Lab	Credits
ENGL-100	English Composition 1	3		3
	General Math Elective (Note 1)	3		3
PSYC-100	General Psychology	3		3
	Lab Science Elective (Note 2)	3	3	4
HIST-110	Survey of Early U.S. History and Government *(or)*			
HIST-210	Survey of Modern U.S. History	3		3
		15	3	16

SEMESTER 2

ENGL-200	English Composition 2: Intro. to Lit.	3		3
	Math Elective (Note 1)	3		3
	Major course	3		3
	Humanities Elective (Note 3)	3		3
HIST-100	Survey of Early Western Civilization	3		3
		15		15

SEMESTER 3

	Major course	3		3
	Humanities Elective (Note 3)	3		3
	Literature/Philosophy Elective (Note 4)	3		3
PSYC-350	Adolescent Psychology	3		3
	Lab Science Elective (Note 2)	3	3	4
		15	3	16

SEMESTER 4

	Major course	3		3
	Literature/Philosophy Elective (Note 4)	3		3
	Global Diversity course (Note 5)	3		3
	Major course	3		3
	Major course	3		3
		15		15

Note 1: MATH-124/224 Math for a Technical Society 1 or 2; or MATH-157/257 Calculus for Business, Life and Social Sciences 1 or 2

Note 2: BIOL-102 Principles of Biology 1; BIOL-202 Principles of Biology 2; BIOL-106 General Biology 1; BIOL-206 General Biology 2; PHYS-125 Physical Science; CHEM-101 Survey of Chemistry 1; CHEM-103 General Chemistry 1

Note 3: ARTS-146 Design: Introduction to Art; ARTS-140 Art History; ARTS-240 Art History 2; or MUSC-130 Music Appreciation

Note 4: PHIL-110 Philosophy 1; or HONR-505 Ethics Colloquium; or ENGL-300 Literature of the Western World

Note 5: Global diversity course: ENGL 308/408 Women in Literature 1 or 2

Upon successful completion of the requirements for this program as listed above, the degree of **Associate in Arts in Liberal Arts Transfer** will be awarded.

Math, Sciences and Engineering Transfer

Computer Science Transfer students Christopher Walker-Ray and Ian Ricci, both going on to UMass in computer science. Chris created a computer program to solve the popular Sudoku puzzles. Ian, who already owns a small network and website design company, expanded a program created by his professor, Tony Silvestri, so that it would work universally on all operating systems. The program translates IP addresses of visitors to a website into information on country of origin, platform, and domain name.

Math, Sciences, and Engineering Transfer

This school is comprised of six departments: Biological Sciences, Biotechnology, Chemistry, Engineering and Science Transfer, Mathematics, and Physics.

Biotechnology is an associate-degree-granting department which offers the option of transferring to a four-year biotechnology program or entering the exciting field of biotechnology as a technician after two years of study. A new certificate program with four different pathways allows current or potential employees of biotechnology companies to update or develop skills in the area of their choice, from facilities, to manufacturing, to quality control.

Engineering and Science Transfer is also a degree-granting department, which offers the first two years of a four-year university program in chemical, civil, electrical, computer, or mechanical engineering, and computer science. It also offers options for students who wish to major in biology, chemistry, mathematics, physics, pre-med, pre-dental, pre-vet, pre-pharmacy, and other science transfer programs.

The departments of Biological Sciences, Chemistry, and Physics offer a wide variety of courses for students in the health sciences, technologies, and engineering and science transfer. These departments have modern, up-to-date equipment and labs available for student use. Students can complete the first two years of a bachelor's degree in any of these academic disciplines. The degree will be awarded through the Engineering and Science Transfer department.

The Mathematics department offers developmental and college-level courses in a variety of instructional modes such as traditional lecture; student-centered group learning, self-paced, and asynchronous distance modes. Students can complete the first two years of a four-year mathematics degree and transfer to a senior college or university. The degree is awarded through the Engineering and Science Transfer department.

Engineering and Science Transfer

Associate Degree Program ESTR

The mission of the Engieering and Science Transfer Department is to provide students with the first two years of a four-year engineering or science-based curriculum. The quality and breadth of this education is such that the students may be able to transfer to any four-year college or university, and often complete their baccalaureate degree in two additional years. In addition to completing the first two years of a baccalaureate degree, the student receives the degree of Associate in Science in Engineering and Science Transfer with the following concentrations:

Associate in Science in:			
Engineering	ENGR.AS	Chemistry	CHEM.AS
Computer Science	CSCI.AS	Pre-Med/Pre-Den/Pre-Vet	MDVT.AS
Technical Engineering	TECH.AS	Mathematics	MATH.AS
Biology	BIOL.AS	Physics	PHYS.AS
Certificate of Completion in			
Technical Engineering	TECH.COC		

STCC's Engineering and Science Transfer department has been recognized as a Center for Excellence in Engineering Transfer, and annually transfers students to four-year colleges and universities all across the country. Students have transferred to over 60 colleges and universities including such well-known institutions as the Massachusetts Institute of Technology, Cornell, Purdue, University of Florida, Northeastern, Mt. Holyoke, and Boston University.

Locally, the Engineering and Science Transfer program participates in the Joint Admission program with the University of Massachusetts, and has articulation agreements with Western New England College, Worcester Polytechnic Institute, and Rensselaer Polytechnic Institute. RPI also annually presents the Joseph H. Smith Jr. '45 Award to one of the outstanding graduates of STCC's Engineering and Science Transfer program. This award is accompanied by substantial financial aid to attend RPI.

STCC's Engineering and Science Transfer department is a leader in integrating the computer with the curricula. The department has two computer laboratories: a 23-station PC networked lab and an 18-station assembly language lab. These labs are upgraded annually so that the students are constantly working with state-of-the-art software and hardware. Through these laboratories, students have access to the most modern software including the computer languages C++, Visual Basic and Java, Front Page, word processing, spreadsheets, CAD, and numerous mathematical analysis and simulation packages, as well as access to the Internet.

The department also has three multimedia classrooms where all computer science and most engineering and math courses are taught. Students also use modern labs in chemistry, physics, electronics, and materials science.

Entrance Requirements

In order to be admitted to one of the Engineering and Science Transfer programs, a student should have completed two years of algebra, one year of geometry, and one year of trigonometry or senior math. In addition, students intending to major in engineering, computer science, math, chemistry or physics should have

completed one year each of chemistry and physics, while biological sciences and pre-med/pre-dental/pre-vet majors should have completed one year each of chemistry and biology. Applicants should also have achieved minimum SAT1 scores of 500 in math and 350 in English.

The SAT exam is required for admission to all options of the Engineering and Science Transfer program except for the Technical Engineering Certificate of Completion. However, applicants with previous college experience (at STCC or elsewhere) will be exempt from the SAT requirement if they have completed all of the prerequisite college math and science courses with at least a B- average and English Composition 1 with at least a C-.

Applicants not meeting all of the entrance requirements may still be considered but should understand that it might require additional time and effort on their part in order to prepare themselves for the required mathematics, science, and engineering courses in the Engineering and Science Transfer programs. Applicants not deemed ready to enter the program are offered an alternate acceptance to the General Studies program Pre-Engineering and Science option (ENGC-GS). Students typically spend one year in this core remedying their academic deficiencies in mathematics and the sciences, and then reapply to the Engineering and Science Transfer department.

In order to transfer successfully into the Engineering and Science Transfer department from the General Studies Pre-Engineering and Science option, a student must complete all of the prerequisite mathematics and science courses with a minimum average grade of B-. In addition, ENGL-100 must be completed with a minimum grade of C-.

All applications are reviewed by the Engineering and Science Transfer department, and the successful applicant is counseled and scheduled for his or her first semester's courses by a member of the department.

ENGINEERING TRANSFER OPTION **ENGR.AS**

SEMESTER 1

No.	Course Title	Class	Lab	Credits
ENGL-100	English Composition 1	3		3
CHEM-103	General Chemistry 1	4	3	4
ENGR-203	Computer Applic. in Engineering *(or)*			
CSCI-111	Intro. to the Java Program. Language	3	3	4
MATH-155	Calculus 1	6		4
	Elective: Social Science	3		3
		19	6	18

SEMESTER 2

PHYS-132	University Physics 1	3	3	4
CHEM-203	General Chemistry 2 *(or)*			
BIOL-106	General Biology 1 (Note 1)	4	3	4
MATH-255	Calculus 2	6		4
CSCI-100	Introduction to Computer Science *(or)*			
CSCI-111	Intro. to the Java Programming Language (Note 2)	3	3	4
ENGL-200	English Comp. 2: Intro. to Lit.	3		3
		19	9	19

SEMESTER 3				
PHYS-232	University Physics 2	3	3	4
	Elective: Math, Science, or Engineering	3		3
	Elective: Engineering	3		3
MATH-355	Calculus 3	6		4
	Elective: Social Science or Humanities	3		3
		18	3	17
SEMESTER 4				
	Elective: Engineering	3		3
	Elective: Engineering	3		3
	Elective: Math, Science, or Engineering	3		3
MATH-439	Linear Algebra *(or)*			
MATH-455	Differential Equations *(or)*			
ENGR-411	Probability & Statistics for Engineers	4		4
	Elective: Social Science or Humanities	3		3
		16		16

Note 1: BIOL-106, General Biology 1, should be selected by Computer, Electrical, Industrial, and Mechanical Engineering majors going to UMass.

Note 2: Computer and Electrical Engineers going to UMass should take CSCI-111 (C++) while all other engineering majors going to UMass should take CSCI-100

Upon the successful completion of requirements for this program, as listed above, the degree of **Associate in Science in Engineering and Science Transfer** will be awarded.

COMPUTER SCIENCE TRANSFER OPTION **CSCI.AS**

SEMESTER 1

No.	Course Title	Class	Lab	Credits
ENGL-100	English Composition 1	3		3
CSCI-100	Introduction to Computer Science	3	3	4
CSCI-111	Intro. to the Java Programming Lang.	3	3	4
MATH-155	Calculus 1	6		4
	Elective: Social Science	3		3
		18	6	18
SEMESTER 2				
ENGL-200	Composition 2: Intro. to Lit.	3		3
PHYS-132	University Physics 1	3	3	4
CSCI-211	Intermediate Topics in Java Prog.	3	3	4
MATH-255	Calculus 2	6		4
	Elective: Humanities or Soc. Science	3		3
		18	6	18

COMPUTER SCIENCE TRANSFER OPTION

SEMESTER 3

CSCI-321	Computer Organization and Digital Logic	3	3	4
CSCI-401	Data Structures and Algorithms	3	3	4
PHYS-232	University Physics 2	3	3	4
MATH-355	Calculus 3	3		3
	Elective: Humanities or Social Science	3		3
		15	9	18

SEMESTER 4

CSCI-310	Machine and Assembly Language	3	3	4
MATH-439	Linear Algebra	3		3
MATH-376	Discrete Structures	4		4
	Elective: Math, Engr or CSCI	4		4
	Elective: Humanities or Social Science	3		3
		17	3	18

Upon the successful completion of requirements for this program, as listed above, the degree of **Associate in Science in Engineering and Science Transfer** will be awarded.

TECHNICAL ENGINEERING OPTION — TECH.AS

The Technical Engineering Option is a general technology program. It is for students who do not want to major in any specific technology but want a broad background. If, after spending one year in this option, a student becomes interested in a specific technology, it is possible for him to transfer to that technology.

This program is also designed to interface with both the Engineering Transfer Program and the Pre-Engineering Option, Level 2 (ENGC.GS) of the General Studies Program. A student, after spending one year in either of these programs, may transfer to the Technical Engineering option with no loss of credit.

A student who completes the entire Technical Engineering option is awarded the **Associate in Science Degree in Engineering and Science Transfer.**

SEMESTER 1

No.	Course Title	Class	Lab	Credits
MECH-180	Mechanical CAD 1: 2D Fund.	2	1	2
ENGL-100	English Composition 1	3		3
CHEM-101	Survey of Chemistry 1 *(or)*			
CHEM-103	General Chemistry 1	4	3	4
MATH-132	Technical Math 1 *(or)*			
MATH-155	Calculus 1	6		4
PHYS-130	College Physics 1 *(or)*			
PHYS-132	University Physics 1	3	3	4
		18	7	17

SEMESTER 2				
MECH-280	CAD 2: 3D Fundamentals	3	3	4
WRIT-202	Technical Report Writing	3		3
MATH-232	Technical Math 2 *(or)*			
MATH-255	Calculus 2	6		4
PHYS-230	College Physics 2 *(or)*			
PHYS-232	University Physics 2	3	3	4
	Elective: Soc. Science/Humanities	3		3
		18	6	18
SEMESTER 3				
CMPA-103	Microcomputer Applic. for Windows	3		3
ESET-141	Electric Circuits *(and)*	3		3
ESET-145	Electric Circuits Lab *(or)*		3	1
ENGR-320	Circuit Analysis 1 *(and)*			
ENGR-324	Electrical Engr. Lab 1			
CIVL-345	Statics and Strength of Materials *(or)*			
ENGR-310	Mechanics 1 (Statics)	3		3
MATH-155	Calculus 1 *(or)*			
MATH-355	Calculus 3	6		4
	Elective: Math/Science/Technical	3	3	4
		18	6	18
SEMESTER 4				
CSCI-100	Intro. to Computer Science *(or)*			
CSCI-111	Intro. to Java Programming	3	3	4
ESET-260	Digital Systems *(and)*	3		3
ESET-265	Digital Systems Lab *(or)*		3	1
ENGR-420	Circuit Analysis 2 *(and)*			
ENGR-427	Electronic Engineering Lab 2			
ENGR-335	Mechanics of Materials *(or)*			
CIVL-446	Structures	4		3
MATH-255	Calculus 2 *(or)*			
MATH-455	Differential Equations	6		4
	Elective: Math/Science/Technical	3	3	3
		19	9	18

SCIENCE TRANSFER OPTION

BIOLOGICAL SCIENCES TRANSFER PROGRAMS

Springfield Technical Community College offers several biology transfer programs from which its graduates are well-qualified to enter the junior year of a biology major, pre-med major, pre-vet major, pre-dental major, or a pharmacy major. Students are advised by biology faculty members who will guide them in course selections to meet the requirements of the various colleges and universities to which the students may apply.

Students who cannot meet all the requirements for the degree of Engineering and Science Transfer may consider the option of an Associate degree in Liberal Arts

SCIENCE TRANSFER OPTION

Transfer or General Studies, while pursuing the goal of transferring to a four-year college to continue studies in the biological sciences.

Biology Option **BIOL.AS**

SEMESTER 1

No.	Course Title	Class	Lab	Credits
CHEM-103	General Chemistry 1	4	3	4
BIOL-106	Biology 1	3	3	4
ENGL-100	English Composition 1	3		3
SOCL-100	Intro. to Sociology	3		3
MATH-155	Calculus 1	6		4
		19	6	18

SEMESTER 2

CHEM-203	General Chemistry 2	4	3	4
BIOL-206	Biology 2	3	3	4
ENGL-200	Comp. 2: Intro. to Lit.	3		3
PSYC-100	General Psychology	3		3
MATH-255	Calculus 2 (or)			
STAT-142	Statistics	3		3
		16	6	17

SEMESTER 3

CHEM-320	Organic Chemistry 1	3	4	4
BIOL-360	Genetics	3	4	4
	Elective: Social Science	3		3
PHYS-130	College Physics 1	3	3	4
	Elective: General Education (Note 2)	3		3
		15	11	18

SEMESTER 4

CHEM-420	Organic Chemistry 2	3	4	4
	Elective: Biology (Note 1)	3	3	4
PHYS-230	College Physics 2	3	3	4
	Elective: Humanities	3		3
	Elective: General Education (Note 2)	3		3
		15	10	18

Note 1: Electives to be selected from: BIOL-113, BIOL-121, BIOL-132, BIOL-310, BIOL-320, BIOL-350, BIOL-351

Note 2: Check curriculum of college you plan to attend to determine what this elective should be

Upon the successful completion of requirements for this program, as listed above, the degree of **Associate in Science in Engineering and Science Transfer** will be awarded.

Pre-Med/Pre-Dental/Pre-Vet Option **MDVT.AS**

SEMESTER 1

No.	Course Title	Class	Lab	Credits
CHEM-103	General Chemistry 1	4	3	4
BIOL-106	Biology 1	3	3	4
ENGL-100	English Composition 1	3		3
SOCL-100	Intro. to Sociology	3		3
MATH-132	Technical Math 1 (or)			
MATH-155	Calculus 1	6		4
		19	6	18

SEMESTER 2

CHEM-203	General Chemistry 2	4	3	4
BIOL-206	Biology 2	3	3	4
ENGL-200	Comp. 2: Intro. to Lit.	3		3
MATH-232	Technical Math 2 (or)			
MATH-255	Calculus 2	6		4
PSYC-100	General Psychology	3		3
		19	6	18

SEMESTER 3

PHYS-130	College Physics 1	3	3	4
CHEM-320	Organic Chemistry 1	3	4	4
BIOL-360	Genetics	3	4	4
	Elective: Social Science	3		3
	Elective: General Education (Note 2)	3		3
		15	11	18

SEMESTER 4

CHEM-420	Organic Chemistry 2	3	4	4
PHYS-230	College Physics 2	3	3	4
	Elective: Biology (Note 1)	3	3	4
	Elective: Humanities	3		3
	Elective: General Education (Note 2)	3		3
		15	10	18

Note 1: Electives to be selected from: BIOL-113, BIOL-121, BIOL-132, BIOL-310, BIOL-320, BIOL-350, BIOL-351.

Note 2: Check curriculum of college you plan to attend to determine what this elective should be.

Upon the successful completion of the requirements for this program, as listed above, the degree of **Associate in Science in Engineering and Science Transfer** will be awarded.

Chemistry Option **CHEM.AS**

SEMESTER 1

No.	Course Title	Class	Lab	Credits
CHEM-103	General Chemistry 1	4	3	4
ENGL-100	English Composition 1	3		3
	Elective: Humanities/Soc. Sci. (Note 1)	3		3
MATH-155	Calculus 1	6		4
ENGR-203	Computer Applications in Engin. (or)			
CSCI-100	Introduction to Computer Science	3	3	4
		19	6	18

SEMESTER 2

CHEM-203	General Chemistry 2	4	3	4
ENGL-200	Comp. 2: Intro. to Lit.	3		3
MATH-255	Calculus 2	6		4
	Elective: Humanities/Soc. Sci. (Note 1)	3		3
	Elective: Math/Science/ Technical (Note 2)	3		3
		19	3	17

SEMESTER 3

CHEM-320	Organic Chemistry 1	3	4	4
PHYS-130	College Physics 1 (or)			
PHYS-132	University Physics 1	3	3	4
MATH-355	Calculus 3	4		4
	Elective: Social Science/ Humanities (Note 1)	3		3
	Elective: Math/Science/ Technical (Note 2)	3		3
		16	7	18

SEMESTER 4

CHEM-420	Organic Chemistry 2	3	4	4
	Elective: Technical/Math/ Science (Note 2)	3		3
	Elective: Social Science/ Humanities (Note 1)	3		3
MATH-455	Differential Equations	6		4
PHYS-230	College Physics 2 (or)			
PHYS-232	University Physics 2	3	3	4
		18	7	18

Note 1: Most four-year institutions require two years of a foreign language. Check the curriculum of the college you plan to attend for specific details regarding these electives.

Note 2: Check the curriculum of the college you plan to attend to determine what this elective should be.

Upon the successful completion of requirements for this program, as listed above, the degree of **Associate in Science in Engineering and Science Transfer** will be awarded.

Mathematics Option **MATH.AS**

SEMESTER 1

No.	Course Title	Class	Lab	Credits
ENGL-100	English Composition 1	3		3
CHEM-103	General Chemistry 1	4	3	4
CSCI-111	Intro. to Java Prog. Language	3	3	4
MATH-155	Calculus 1	6		4
	Elective: Humanities/Soc. Sci. *	3		3
		19	6	18

SEMESTER 2

ENGL-200	Comp. 2: Intro. to Lit.	3		3
CHEM-203	General Chemistry 2	4	3	4
MATH-255	Calculus 2	6		4
PHYS-132	University Physics 1	3	3	4
	Elective: Humanities/Soc. Sci. *	3		3
		19	6	18

SEMESTER 3

MATH-355	Calculus 3	6		4
PHYS-232	University Physics 2	3	3	4
	Elective: General Education *	3		3
	Elective: Humanities/Social Science *	3		3
	Elective: Math/Science/Technical *	3	3	4
		18	6	18

SEMESTER 4

MATH-439	Linear Algebra	3		3
MATH-455	Differential Equations	6		4
	Elective: General Education *	3		3
	Elective: Humanities/Social Science *	3		3
MATH-376	Discrete Structures	4		4
		19		17

* Check curriculum of college you plan to attend to determine what this elective should be.

Upon the successful completion of requirements for this program, as listed above, the degree of **Associate in Science in Engineering and Science Transfer** will be awarded.

Physics Option **PHYS.AS**

SEMESTER 1

No.	Course Title	Class	Lab	Credits
ENGL-100	English Composition 1	3		3
CHEM-103	General Chemistry 1	4	3	4
CSCI-111	Intro. to Java Program. Language	3	3	4
MATH-155	Calculus 1	6		4
	Elective: Humanities/Soc. Sci. *	3		3
		19	6	18

SEMESTER 2

ENGL-200	Comp. 2: Intro. to Lit.	3		3
CHEM-203	General Chemistry 2	4	3	4
MATH-255	Calculus 2	6		4
PHYS-132	University Physics 1	3	3	4
	Elective: Humanities/Soc. Sci. *	3		3
		19	6	18

SEMESTER 3

MATH-355	Calculus 3	6		4
PHYS-232	University Physics 2	3	3	4
	Elective: General Education *	3		3
	Elective: Humanities/Social Science *	3		3
	Elective: Math/Science/Technical *	3	3	4
		18	6	18

SEMESTER 4

MATH-455	Differential Equations	6		4
PHYS-332	University Physics 3	3	3	4
	Elective: General Education *	3		3
	Elective: Humanities/Social Science *	3		3
	Elective: Math/Science/Technical *	3	3	4
		18	6	18

* Check curriculum of college you plan to attend to determine what this elective should be.

Upon the successful completion of requirements for this program, as listed above, the degree of **Associate in Science in Engineering and Science Transfer** will be awarded.

TECHNICAL ENGINEERING **TECH.COC**

Certificate of Completion program

The Technical Engineering Certificate of Completion is a fast-track program that enables a student to acquire basic engineering skills in only one year. During this year a student takes classes in chemistry, mathematics, computing, drafting, and English, and develops the ability to work in tandem with engineers and technicians taking data, performing tests, and doing routine calculations. After completion of this certificate, a student should be able to seek employment as an engineering

aide or continue his or her education toward an Associate in Science degree in the Technical Engineering Option of the Engineering and Science Transfer program.

SEMESTER 1

No.	Course Title	Class	Lab	Credits
CMPA-103	Microcomputer Applications for Windows	3		3
ENGL-100	English Composition 1	3		3
CHEM-101	Survey of Chemistry 1	3	3	4
ENGR-109	Intro. to Engineering Graphics		3	1
MATH-132	Technical Mathematics 1	4		4
		13	6	15

SEMESTER 2

WRIT-202	Technical Report Writing	3		3
PHYS-130	College Physics 1	3	3	4
ENGR-106	Intro. to Computer-Aided Drafting	1	2	1
ENGR-421	Engineering Measurements & Analysis	2	3	2
STAT-142	Statistics	3		3
		12	8	13

Upon successful completion of requirements for this program, a **Certificate of Completion in Technical Engineering** from STCC will be awarded.

Biotechnology BIOT.AS

Associate Degree Program

The Biotechnology curriculum is designed to meet the ever-expanding need for trained personnel in the field of biotechnology. The commonwealth of Massachusetts currently has the highest concentration of biotechnology activity in the world. There are now over 300 companies employing more than 28,000 people statewide. The biotechnology industry also employs over 150,000 people across the United States. This industry continues to grow in New England and is looking for trained employees. Graduates of this program will be in a challenging, exciting field with excellent benefits and opportunities.

What is biotechnology? The term biotechnology encompasses a wide range of applications associated with the use of living things such as cells and bacteria to make useful products. Current applications of biotechnology include industrial production of pharmaceuticals such as vaccines and insulin, genetic testing, DNA fingerprinting, and genetic engineering of plants and animals.

Students have the option of selecting the transfer or career option listed below. Upon successful completion of requirements for this program, as listed below, the degree of **Associate in Science in Biotechnology** will be awarded. A grade of "C" or better is required in all program courses.

Transfer Compact Option

The Biotechnology/Transfer Compact Option has been designed to meet the transfer requirements of four-year public colleges or universities that are members of the Commonwealth Transfer Compact, or those colleges that are accredited by the AACSB. All course choices should be discussed with the College's transfer counselor or your advisor, as different institutions may vary in their particular program requirements.

Career Option

The Biotechnology Career Option concentrates on the methodology and techniques of microbiology, biochemistry, cell biology, genetics, and cell culture. Career option graduates will be qualified for positions such as lab assistant, research assistant, media prep technician, quality control inspector, safety technician, manufacturing technician, and documentation specialist.

Entrance Requirements

In order to be admitted to the Biotechnology program, an applicant should have completed two years of algebra, one year of geometry, and one year of trigonometry or senior math, and one year each of chemistry, biology, and physics with a grade of "B" or better. Applicants should also have achieved a minimum of 800 combined SAT1 score.

Applicants not meeting all the entrance requirements may still be considered, but should understand that it might require additional time and effort on their part in order to prepare themselves for the required mathematics and science courses. Applicants not deemed ready to enter the program are offered an alternate acceptance to the General Studies program. Students typically spend one year in this core remedying their academic deficiencies in the mathematics and sciences, and then reapply to the Biotechnology program.

SEMESTER 1

No.	Course Title	Class	Lab	Credits
ENGL-100	English Composition 1	3		3
BIOL-106	Biology 1	3	3	4
BIOT-151	Introduction to Biotechnology	1		1
CHEM-103	General Chemistry 1	3	4	4
MATH-155	Calculus 1 *(Note 1) (or)*			
MATH-132	Tech Math 1	6		4
		16	7	16

SEMESTER 2

CMPA-103	Microcomputer Applications for Windows	3		3
BIOL-206	Biology 2	3	3	4
CHEM-203	General Chemistry 2	3	4	4
MATH-255	Calculus 2 *(Note 1) (or)*			
MATH-232	Technical Math 2	6		4
PSYC-100	General Psychology	3		3
		18	7	18

SEMESTER 3				
WRIT-202	Technical Report Writing *(or)*			
ENGL-200	English Comp. 2: Intro. to Lit.	3		3
BIOL-121	Microbiology	3	3	4
BIOL-360	Genetics	3	4	4
CHEM-320	Organic Chemistry 1 *(Note 2) (or)*			
BIOL-140	Biochemistry	3	4	4
		12	11	15
SEMESTER 4				
BIOT-251	Biotechnology	3	3	4
BIOL-351	Cell Biology	3	3	4
CHEM-420	Organic Chemistry 2 *(Note 3) (or)*			
STAT-142	Statistics	3	4	4
	Elective: Social Science	3		3
		12	10	15

Note 1: Career option students should take MATH-132 and MATH-232.
Note 2: Career option students should take BIOL-140.
Note 3: Career option students should take MATH-142.

BIOTECHNOLOGY MANUFACTURING — BMFG.COC

Certificate of Completion program

The Biotechnology Manufacturing Certificate of Completion is a fast-track program that enables a student to acquire current biotechnology skills in one year. As the demand for employees in biotechnology increases in the greater Springfield area, particularly in biomanufacturing, there are a growing number of students who wish to complete a certificate program in biotechnology. There is also the potential for employers to want their employees to earn a certificate to update their laboratory skills. This certificate program is specifically designed for students who wish to obtain the skills and knowledge necessary for direct employment in the biotechnology industry.

There are four options within the certificate program, focusing on skills required for different jobs in biomanufacturing. The certificate consists of 27 to 29 credits with a common core of courses including biology, chemistry, and math, and several courses specific to the particular option chosen. These courses prepare the student for working in the biotechnology industry by developing the student's skills in laboratory calculations, sterile technique, proper processing of materials, and quality control procedures. After completion of this certificate, the student should be able to seek employment as a biomanufacturing technician, quality control technician, or facilities operator in a biotechnology company.

Requirements for acceptance

Students who are enrolling in the certificate program must have already met the prerequisites for enrolling in the required classes. These students may have already completed an associate or bachelor's degree, or have completed some coursework toward a degree in the biological sciences. Certain prerequisites may be waived if work experience or other circumstances warrant.

Upon successful completion of requirements for this program a **Certificate of Completion in Biotechnology Manufacturing** from STCC will be awarded.

Common core of courses for all options

SEMESTER 1

No.	Course Title	Class	Lab	Credits
CHEM-101	Survey of Chemistry 1	3	3	4
MATH-132	Technical Math 1	4		4
BIOL-102	Principles of Biology 1	3	2	4
ENGL-100	English Composition 1 *(or)*			
WRIT-202	Technical Report Writing *	3		3
		13	5	15

Students who plan to transfer on to complete a bachelor's degree in science may wish to substitute CHEM-102 or CHEM-203 for CHEM-101, and substitute BIOL-106 or BIOL-206 for BIOL-102.

* ENGL-100 is a prerequisite for WRIT-202.

Facilities Option 1

SEMESTER 2

No.	Course Title	Class	Lab	Credits
ENGY-110	Theory of Controls	3		3
ENGY-240	Principles of Refrigeration	2	3	3
(Take 6-8 credits from the following courses)				
ENGY-120	Energy Systems Lab 1	1	3	2
ENGY-220	Combustion Control Circuits	3		3
ENGY-230	Energy Systems Lab 2	1	3	2
ENGY-350	Microprocessor Controls	2	3	3
BIOL-121	Microbiology	3	3	4
				12-14

Permission may be granted to substitute a course from Facilities Option 1 for a course in Facilities Option 2.

Facilities Option 2

SEMESTER 2

No.	Course Title	Class	Lab	Credits
ELEC-110	Basic Electricity 1	2	3	3
ELEC-210	Basic Electricity 2	2	3	3
(Take two of the following courses)				
ELEC-241	Fundamentals of Motor Control	2	3	3
ELEC-331	Control System Theory	4		4
ELEC-320	Industrial Electronics 1	2	3	3
MECH-110	Materials and Processing for World-Class Manufacturing	2	3	3
				12 or 13

Manufacturing Option

SEMESTER 2

No.	Course Title	Class	Lab	Credits
BIOL-121	Microbiology	3	3	4
BIOL-140	Biochemistry	3		3
BIOL-202	Principles of Biology 2 *(or)*			
BIOL-351	Cell Biology *(or)*			
BIOT-251	Biotechnology	3	3	4
		9	6	11

CHEM-203 and BIOL-206 are prerequisites for BIOT-251 and BIOL-351. BIOT-251 and BIOL-351 may not be available in the evening.

Quality Control/Quality Assurance Option

SEMESTER 2

No.	Course Title	Class	Lab	Credits
BIOL-140	Biochemistry	3		3
STAT-142	Statistics	3		3
BIOT-210	Quality Control for Biotech. Manuf.	3		3
(Take one of the following courses)				
MATH-232	Technical Math 2	4		4
CMPA-101	Intro. to Word Processing	3		1
CMPA-103	Microcomputer Applications for Windows	3		3
CMPA-202	Advanced Word Processing	3		3
				10-13

Course Descriptions

Jose Gonzalez y Criollo Classico presented a Latin music workshop and performance demonstrating the influences of world rhythms including bomba, jibaro, salsa, son, flamenco, samba, bachata, and bolero on Puerto Rican music.

Accounting
(*See* Business Administration)

Anthropology
(*See* Social Sciences)

Art
(*See* Fine Arts)

Automotive Technology

AUTO-112 — ELECTRICAL SYSTEMS 3 credits
This course combines lecture and laboratory hands-on activities focusing on the fundamentals of automotive electrical systems. Emphasis will be placed on direct current electricity, series and parallel circuits, power distribution, electrical measuring devices, and schematics reading. The course covers the operation, testing, and repair of starting and charging systems as well as a concise diagnostic approach to repairing automotive wiring concerns. PREREQUISITE: None

AUTO-115 — BRAKE SYSTEMS 3 credits
This course covers the design, construction, and operation of various disc and drum brake systems. A study of basic hydraulics and the functions of wheel and master cylinders, calipers, power assist units, and various systems bleeding and adjustment techniques are included. Instruction in machining and measuring drums and rotors is given using modern equipment. Operational and diagnostic procedures of four-wheel antilock and traction control systems will be provided. Late model vehicles will be used for laboratory hands-on activities for all brake system procedures.
PREREQUISITE: None

AUTO- 210 — GASOLINE ENGINE SERVICE 3 credits
This is a classroom and laboratory study of the principles of the four-stroke internal combustion engine involving construction, operation, identification of engine systems, trouble shooting, noise analysis, and overhaul techniques. The hands-on portion of the course will encompass engine removal, disassembly, cleaning, inspection, measurement, servicing, reassembly, and installation of fully-operational engines in laboratory vehicles. PREREQUISITE: AUTO-112

AUTO- 212 — AUTOMOTIVE ELECTRONIC SYSTEMS 3 credits
Advanced topics such as automotive microcomputer systems, including electronic engine control, electronically-controlled transmissions, climate control, variable steering, active suspension, supplemental air bag, keyless entry, and electronic instrumentation (message center, tripminder, fuel computer) will be studied in detail.
PREREQUISITE: AUTO-112

AUTO-240 — CLIMATE CONTROL 3 credits
This course is designed with lecture and hands-on activities to examine the principles of automotive refrigeration, heating, and air distribution control. Emphasis is placed on the theory, operation, maintenance, and repair of manual, automatic, and electronic

automatic temperature control systems. Diagnostic assignments using refrigerant recovery and recharging equipment on laboratory vehicles provide practical experience while reinforcing safety and environmental considerations. PREREQUISITE: AUTO-112

AUTO-250 — DIESEL ENGINE OPERATIONS 2 credits
A classroom and laboratory study of the basic operation principles and construction of the diesel engine. Objectives of this course are to provide the student with diesel engine and powertrain control system operation and diagnostic procedures. Laboratory exercises include evaluating worn or failed components and determining the cause/effect relationship on engine performance. PREREQUISITE: AUTO-210

AUTO-340 — STEERING AND SUSPENSIONS 3 credits
This is a comprehensive classroom and laboratory study of the design, construction, and operation of front and rear wheel drive suspension systems, steering systems, wheel alignment angles, and wheel balancing. Laboratory exercises will stress noise vibration, and harshness drivability concerns related to these systems. Electronic steering and electronic suspension operation and diagnosis using laboratory vehicles will be included. PREREQUISITE: AUTO-212

AUTO-350 — TRANSMISSION AND TRANSAXLE 1 3 credits
The operation, diagnosis, and repair of the modern front and rear wheel drive automatic transmission will be studied in a classroom/laboratory format. Instruction in hydraulic controls, mechanical operation, and electronic diagnosis is emphasized. Students participate in the removal, disassembly, overhaul and reassembly of fully-operational transmissions in laboratory vehicles. PREREQUISITE: AUTO-212

AUTO-440 — ADVANCED CONTROL SYSTEMS 4 credits
This course focuses on the most up-to-date electronic computer-controlled systems used to monitor engine operating efficiency and emission compliance control devices. Emphasis is placed on the servicing and diagnosis of such systems as electronic distributorless ignition, sequential electronic fuel injection, air control, microcomputer strategy and multiplexing. Specific pinpoint test step procedures are practiced as students participate in lab assignments using state-of-the-art diagnostic equipment. PREREQUISITES: AUTO-210, AUTO-212

AUTO-450 — TRANSMISSION AND TRANSAXLE 2 3 credits
This course covers the operation and diagnosis/repair of manual transmissions/transaxles, clutches, drive shafts, differentials, halfshafts, and final drives. Transfer case and four-wheel drive systems components, operation, and diagnosis are also discussed in detail, with emphasis on hands-on participation. Presents the students with a systematic, diagnostic, logical problem-solving approach to complex systems. Reinforces the importance of using the library of Ford repair and diagnostic manuals available, including online automotive service information system (OASIS), electronic service publications, and the worldwide diagnostic system (WDS). Reinforces the importance of clean, organized working habits in all facets of service-related areas. PREREQUISITE: AUTO-212

Biological Sciences

BIOL-090 — BASIC BIOLOGICAL SCIENCE 4 credits
An interdisciplinary, entry-level course in biology. Critical thinking skills are reinforced in both reading and lab-based science areas. The basic and integrated process skills employed by scientists are developed to prepare the student for college-level science experiences. This is a developmental course. Credit for this course will not be counted toward fulfilling graduation requirements at STCC. PREREQUISITE: None

BIOL-100 — NATURAL SCIENCE FOR EARLY CHILDHOOD EDUC. 4 credits
This course is designed to provide a basic background in zoology, botany, ecology, and environmental science. The course is designed to provide potential pre-school teachers the science foundation necessary to develop programs for their students. The class meets for four hours of lecture per week.

BIOL-102 — PRINCIPLES OF BIOLOGY 1 4 credits
Principles of Biology is an introductory course designed to meet the needs of the student who has no background in chemistry or biology. This is the first part of a two-semester presentation of the basic concepts of life science for the transfer student who does not wish to major in science, and for the health career program candidate for whom biology is a prerequisite. The first semester provides an introduction to fundamental biological concepts including: the modern concept of life, the structure and function of cells, biochemistry, cell reproduction, patterns of inheritance, and modern cell theory. PREREQUISITES: completion of ARTH-073 or ARTH-078 (or placement above), and DRDG-091 (or placement in DRDG-092 or above).

BIOL-104 — HUMAN BIOLOGY 1 4 credits
This biology course, required for and restricted to the Medical Assistant program, provides a basic knowledge of the structure and function of the human body. It integrates the study of anatomy and physiology with basic chemistry and microbiology, and diseases related to malfunctioning of these systems. Units studied include chemistry; cells; tissues; microbiology; and skeletal, muscle, and nervous systems; accompanied by appropriate laboratory studies and procedures. PREREQUISITE: None

BIOL-106 — BIOLOGY 1 4 credits
Geared to the prospective science major, the first semester of this course provides an introduction to the methods of science followed by a discussion of the molecular basis of biology and the architecture of cells and tissues. Consideration is then given to the central energy pathways—cellular respiration and photosynthesis. An in-depth coverage of cellular reproduction, classical and molecular genetics follows. PREREQUISITE: High School chemistry and biology or permission of the instructor. Honors component available.

BIOL-108 — GENERAL BOTANY 4 credits
A one semester, lecture/laboratory course open to Landscape Design and Management Technology students only. Basic botanical concepts are presented with emphasis on vascular plant anatomy, physiology, reproduction and ecology. Fungi, non-vascular, and seedless vascular plants will also be examined. PREREQUISITE: None

BIOL-109 — BIOLOGY OF MAN 1 3 credits
This course is designed to meet the needs of the student who has no background in biological science. Basic biological concepts are presented with emphasis on the human body. This is a one-semester course, restricted to Spanish-speaking students, for those who require 3 credit hours in a non-laboratory science.

BIOL-113 — FUNDAMENTALS OF ENVIRONMENTAL BIOLOGY 4 credits
This is a four-credit lab course designed to meet the needs of the non-science major. The first half of the course introduces basic ecologic principles such as energy flow through ecosystems, food webs, nutrient cycling, population growth and natural selection. The second half of the course addresses many of the environmental problems currently facing humans. Topics discussed include human population dynamics, natural resource consumption, loss of biological diversity, deforestation, habitat loss, endangered species, climate change, and environmental laws. PREREQUISITE: None

BIOL-121 — MICROBIOLOGY 4 credits
A basic study of microorganisms, their structure, growth processes, and control. The concepts of infection, immunity and hypersensitivity precede the survey of the microbiology of major infectious diseases. The course meets for three hours of lecture and three hours of laboratory per week. PREREQUISITES: High school chemistry and biology. Honors component available.

BIOL-128 — EXPLORATION OF SCIENCE TEACHING 1 credit
A one-credit course designed to allow the student an opportunity to explore science teaching. Weekly 50-minute meetings provide the student with opportunities to discuss science teaching, and to prepare for classroom observations and a teaching activity. Students will be required to prepare a portfolio based on their experiences. PREREQUISITE: BIOL-102 or BIOL-106 or permission of the instructor.

BIOL-132 — ANATOMY & PHYSIOLOGY 1 4 credits
A comprehensive study of the structure and function of the human body, to serve as a background for the application of scientific principles in both everyday life and the work of various health disciplines. Laboratory practice includes the study of tissues by using microscopic examinations and the dissection of animal specimens, along with physiological experimentation. Units covered are concerned with general introductory material, the skeleton, muscles and the nervous system. PREREQUISITES: High school biology and chemistry. Honors component available.

BIOL-136 — APPLIED PHYSIOLOGY 4 credits
This course takes various concepts in human physiology and by a lecture-laboratory approach the physiological principles are explained and illustrated by laboratory experience and clinically oriented tests. The instrumentation and methodology used in studying physiology and making clinical evaluation are emphasized. Aspects of the cardiovascular, respiratory, excretory, immune and nervous systems are investigated in this course. PREREQUISITE: Biology.

BIOL-140 — BIOCHEMISTRY 3 credits
An introduction to biochemical principles. Emphasis is on the major metabolic pathways, the mechanisms of enzyme action, bioenergetics and the role of hormones and other regulatory substances. PREREQUISITES: high school biology and chemistry

BIOL-142 — NUTRITION 3 credits
Application of nutrition principles in the planning, selection and preparation of foods to meet one's physical, social and economic needs. Discussion of current issues such as vegetarianism, health foods, fad diets, weight control, food additives/preservatives, nutrition labeling, stretching the food dollar, and safe food handling will be presented. PREREQUISITES: High school biology and/or chemistry.

BIOL-143 — FUNDAMENTALS OF ANATOMY & PHYSIOLOGY I 3 credits
This course outlines the organization of the human body from the single cell to the coordinated whole, with emphasis on the interaction of all body systems. Special attention is paid to clinical and pathological conditions, and an extensive vocabulary of

medical terminology will be incorporated. RESTRICTED TO OFFICE INFORMATION TECHNOLOGIES.

BIOL-146 — ESSENTIALS OF HUMAN BIOLOGY I 3 credits
This course will present an overview of human anatomy and physiology with an introduction to microbiology. Interaction of all body systems is discussed with emphasis on those topics relating to Cosmetology. Specific topics included are cell structure, tissues, and the skeletal, muscular, and nervous systems. PREREQUISITE: None. RESTRICTED TO COSMETOLOGY.

BIOL-148 — BASICS OF ANATOMY AND PHYSIOLOGY 4 credits
This one-semester course combines a series of lectures and laboratory work designed to provide a student with a basic understanding of the structure and function of the human body. It is designed to meet the needs of students with no background in chemistry or biology but who wish to gain a general knowledge in this area. Basic chemistry, cell and tissue structure, and all body systems will be studied, with appropriate laboratory work. A lab is required with this course. PREREQUISITE: None

BIOL-202 — PRINCIPLES OF BIOLOGY 2 4 credits
This course continues Principles of Biology 1 and examines energy in living systems, genetics, and evolution. The first portion examines how the process of reproduction mixes genes and creates the incredible genetic diversity we see around us. The course then concludes with evolution. Students are encouraged to draw their own conclusions as they study the evidence for evolution, the origin of the earth, and the evolution of microbial life. Primate evolution is also examined. Laboratory activities, class discussion, and written assignments encourage students to integrate and critically assess these important contemporary scientific concepts. This is a transferable course for non-science majors. PREREQUISITE: BIOL-102.

BIOL-204 — HUMAN BIOLOGY 2 4 credits
As a continuation of Human Biology 1, this course includes the study of special sense organs, and endocrine, circulatory, digestive, respiratory, urinary and reproductive systems. Laboratory procedures are stressed in hematology, the cardiovascular system, and the urinary system, accompanied by dissection of appropriate animal specimens and microscopic studies. PREREQUISITE: BIOL-104.

BIOL-206 — BIOLOGY 2 4 credits
A continuation of Biology 1 in which the general morphology and physiology of representatives from all the major kingdoms are discussed. Considerable attention is given to the study of the vascular plant body and vertebrate systems.
PREREQUISITE: BIOL-106. Honors component available.

BIOL-209 — BIOLOGY OF MAN 2 3 credits
This second semester is a continuation of BIOL-109. Certain concepts covered in the first semester are expanded in order to gain an understanding of the human body and man's interaction with his environment, while others are examined on a molecular level to comprehend the cellular approach to modern biology. This course will benefit those students going into the health fields, especially those taking Anatomy & Physiology or Human Biology in the future. Topics include: biochemistry, human anatomy and physiology, reproduction and development, genetics, evolution, and ecology. PREREQUISITE: BIOL-109.

BIOL-220 — CONTEMPORARY HUMAN BIOLOGY 4 credits
This course is a topics course with a heavy emphasis on current happenings in the health and medical fields. The heart, vascular system, immune system, respiratory system, digestive system, muscular system, reproductive system, genetics and em-

bryology are explored and highlighted with a study of how nutrition, exercise, heredity, disease, and other environmental factors can affect their normal functioning. This is a four-credit biology course designed for non-majors. PREREQUISITE: BIOL-102

BIOL-232 — ANATOMY & PHYSIOLOGY 2 4 credits
A continuation of Anatomy & Physiology 1 concentrating on circulatory, respiratory, digestive, urinary, endocrine, and reproductive systems. Laboratory sessions are included. Emphasis is placed on association, correlation, critical thinking and overview of the body as a whole. PREREQUISITE: Anatomy & Physiology 1 (BIOL-132) with a C- or better. Honors component available.

BIOL-243 — FUNDAMENTALS OF ANATOMY & PHYSIOLOGY 2 3 credits
This is a continuation of BIOL-143, RESTRICTED TO OFFICE INFORMATION TECHNOLOGIES

BIOL-320 — HISTOLOGY 4 credits
A study of the microscopic anatomy of cells, tissues, and organs as related to function. Emphasis is on mammalian systems. Discussion of microtechnique, electrophotomicroscopy, and tissue culturing will be introduced. PREREQUISITES: Biology (BIOL-106, BIOL-206); or Anatomy & Physiology (BIOL-132, BIOL-232); or Human Biology (BIOL-104, BIOL-204); or permission of instructor.
Contingent upon enrollment of 12 or more students
Offered Spring Semester in alternating years

BIOL-340 — SECTIONAL ANATOMY 3 credits
An examination of human topical and sectional anatomy to enable the student to identify the structures seen in each plane and to relate any portion of the anatomy to the body as a whole. Emphasis will be placed on anatomy correlation to medical imaging. PREREQUISITES: BIOL-132 and BIOL-232 or BIOL-148

BIOL-350 — EMBRYOLOGY 4 credits
This course will expose the student to the fundamental growth processes and mechanisms that govern normal growth and development in starfish, frog, chick, and pig embryos. Emphasis will be placed on the development of major organs and organ systems and how these systems develop into normal adult structures. Laboratory experiments, models and slides will be used to reinforce the basic principles of normal development and thus provide a basis for the discussion of abnormal development. PREREQUISITES: Biology (BIOL-106, BIOL-206); or Biology (BIOL-102, BIOL-202); or Anatomy & Physiology (BIOL-132, BIOL-232), or permission of instructor.
Contingent upon enrollment of 12 or more students
Offered alternate Spring Semesters

BIOL-351 — CELL BIOLOGY 4 credits
This course provides an exploration into the structure, functions, and specializations of the cell. The lectures delve into how the cellular components provide for the diverse functions of cells. The concepts discussed include regulation of membrane permeability, enzyme function, second messenger systems, protein synthesis and modifications, specialized cells such as neurons, and cancer cells. The laboratory portion exposes students to current research techniques including histology, ion-exchange chromatography, SDS-PAGE, Western blotting, cell culture, and immunocytochemistry. PREREQUISITES: BIOL-106, CHEM-103.

BIOL-360 — GENETICS 4 credits
An introduction to the principles of classical, molecular, population and evolutionary genetics. The history and development of the field of genetics, Mendel's contributions, the molecular and chromosomal basis of inheritance, meiosis and probability theory are highlighted along with gene mapping, variation in inheritance patterns, DNA muta-

tion and repair, and the genetics of cancer and human disease. Modern genetic technologies and their everyday applications are also discussed. Laboratory experiments are designed to complement and demonstrate the major concepts presented in lecture. PREREQUISITES: BIOL-106 and CHEM-101. Honors component available.

BIOL-900 — DIRECTED STUDY IN THE BIOLOGICAL SCIENCES variable credit
Semester hour credit will vary from one to four, depending upon the written, agreed-upon, approved, student/professor contract. PREREQUISITE: Permission of instructor.

BIOT-151 — INTRODUCTION TO BIOTECHNOLOGY 1 credit
This course provides a general introduction to the field of biotechnology. Research trends and methodologies currently exploited within the field are discussed along with the impact these endeavors may have on the quality of life. Discussion focuses primarily on current news topics, and expands into the ethics of various contemporary bio-techniques such as cloning, genetic engineering, and genetic testing. Students are expected to participate in classroom discussions, simulations, and debates.
PREREQUISITE: None

BIOT-197 — COOPERATIVE EDUCATION IN BIOTECHNOLOGY 3 credits
The cooperative education program in biotechnology allows students the opportunity to participate in paid or voluntary employment within the biotechnology industry. The program involves the merging of biotechnology education and industry to prepare students for employment following graduation from the biotechnology program. Students approved for participation in the cooperative education program will routinely attend classes in the morning and work in their job assignment in the afternoon. Minimum requirements for participation include: 2.5 GPA, presently enrolled in 3rd or 4th semester, and approval of the Director of Cooperative Education. A learning contract, approved by the industry supervisor and the Director of Cooperative Education, will be developed between the student and the faculty coordinator. The student will be responsible for setting up routine reviews of his or her work with the faculty coordinator which will provide the basis for grading at the end of the semester.

BIOT-210— QUALITY CONTROL FOR BIOTECHNOLOGY MANUFACTURING
3 credits
This course covers the evolution, current trends, and future direction of U.S. FDA regulatory requirements governing the manufacturing and testing of pharmaceuticals, biopharmaceuticals, and medical devices. Topics including the history of Good Manufacturing Practice (GMP) regulations, GMP requirements for buildings/facilities/equipment and control systems used in production and laboratories will be covered. Specific topics detailing FDA expectations for documentation (SOPs and Production Batch Records) will also be reviewed.

BIOT-251 — BIOTECHNOLOGY 4 credits
An in-depth introduction to the field of biotechnology, designed to familiarize students with research and production techniques commonplace within the biotechnology industry. This course provides students with a strong understanding of the philosophical principles underlying each technique and establish a scientific foundation upon which future techniques can easily be learned. The laboratory portion of the course reinforces material discussed in lecture and offers hands-on experience with contemporary protocols in an industry setting. Students also become familiar with many electronic technologies routinely used in biotechnology including the use of computer databases and the Internet. PREREQUISITES: BIOL-106, BIOL-206, CHEM-103, CHEM-203, BIOL-360 or permission of instructor.

BMDL-120 — INTRODUCTION TO BIOMED 3 credits
Transducers used for temperature, pressure, and flow measurements are discussed along with related concepts in physics. Effort is concentrated on such topics as sensitivity, resolution, recordability, linearity and accuracy, with reference to the above transducers. Although not a prerequisite, knowledge of the algebra of linear equations and exponential functions, as well as elementary trigonometry will be helpful.

Biotechnology
(*See* Biological Sciences)

Business Administration

*Students must place into DRDG-092 (reading) or higher and ALGB-081 or ALGB-087 or higher, or be exempt, to be permitted to enroll in **any** business course. Being enrolled in DWRT-099 (Review for College Writing) does not change this requirement.*

ACCOUNTING

ACCT-110 — ACCOUNTING 1 4 credits
An introductory course designed to present to the student the concepts and principles of financial accounting. The fundamental techniques of the basic accounting system and the accounting cycle for service and merchandise concerns are examined. Additionally, topics such as specialized journals, cash controls, accounts and notes receivable, budgets, inventory, current liabilities and payroll are discussed. PREREQUISITE: None.

ACCT-113 — ACCOUNTING/FINANCIAL 4 credits
This course presents a comprehensive exposure to basic accounting theory. The student is introduced to the accounting cycle, preparation of financial statements, accounting for assets, liabilities, and stockholders' equity of a firm. PREREQUISITE: None

ACCT-210 — ACCOUNTING 2 4 credits
This course is designed to complete the study of financial accounting, and to present some of the basic concepts and principles of managerial accounting. The course will cover the accounting for plant assets, a limited discussion of partnerships, and a thorough coverage of corporations including formation, issuance of stock, dividend, and related topics. Corporate bond issues, investments, the statement of cash flow, and statement analysis are other topics discussed in the course. Additionally, managerial topics such as manufacturing cost accounting and budgeting will be examined. PREREQUISITES: ACCT-110 and DWRT-099.

ACCT-213 — ACCOUNTING/MANAGERIAL 4 credits
This course examines the use of accounting data for managerial decision making. The student is exposed to the cash flow statement, financial statement analysis, cost terminology and analysis, cost behavior, cost/volume/profit analysis, budgeting, relevant

costing, capital budgeting, and the Just-In-Time manufacturing environment. PREREQUISITES: ACCT-113 and DWRT-099.

ACCT-310 — INTERMEDIATE ACCOUNTING 1 3 credits
This course is designed to provide the student with a comprehensive study of the Generally Accepted Accounting Principles and a thorough knowledge of the conceptual framework used in preparing general purpose financial statements. The nature, importance, recording procedures, and presentation of the following balance sheet items are systematically examined: cash, receivables, inventories, plant property and equipment, and intangible assets. Ethics and the need for critical thinking will be interjected throughout the course. Due to the complexity of the subject matter, four class hours are required to present and review the material. PREREQUISITE: ACCT-210.

ACCT-311 — COST ACCOUNTING 3 credits
This course provides the student with a study of the concepts, principles, and objectives of cost accounting and cost accounting systems. Discussions will emphasize the job order and process cost accumulation methods, utilizing both actual and standard cost systems within a manufacturing environment. Flexible budgets, operating budgets, price and efficiency variances, and cost/volume/profit analysis will be examined in detail. Other topics to be covered include: job costing for services, activity-based accounting, life cycle costing, Just-In-Time purchasing, and pricing for short and long run. PREREQUISITE: ACCT-210.

ACCT-312 — MANAGERIAL ACCOUNTING 3 credits
An introduction to the internal uses of accounting for management planning and control, The point of view will be on the use rather than the construction of accounting data. Areas of study include cost concepts and techniques, cost/volume/profit analysis, master budgeting, relevant cost analysis, and capital budgeting. In addition, one hour a week will be spent in a microcomputer laboratory completing managerial problems using MS Excel. PREREQUISITE: ACCT-210.

ACCT-313 — INTRO. TO FEDERAL INCOME TAXES 3 credits
This course presents a comprehensive explanation of the Federal tax code and the accepted practice used in applying tax principles in specific areas as they relate to the preparation of returns involving individuals; Massachusetts income taxes as they affect individuals are also reviewed. PREREQUISITE: ACCT-210.

ACCT-316 — COMPUTERIZED ACCOUNTING 3 credits
This course is designed to enhance the student's knowledge and capability in the accounting field by providing the student with the opportunity to complete all the steps in the accounting cycle using actual accounting software packages. Electronic spreadsheets will be used for analysis and recordkeeping. System design, theory and controls will also be examined. PREREQUISITE: ACCT-110, CMPA-103.

ACCT-410 — INTERMEDIATE ACCOUNTING 2 3 credits
This course continues the study of Generally Accepted Accounting Principles and the conceptual framework used in presenting balance sheet items initiated in Intermediate Accounting 1. The nature, importance, recording procedures and presentation of the following balance sheet accounts are examined: current liabilities, long-term liabilities, investments, contributed capital and retained earning, pension, leases, and income taxes. Additionally, earnings per share and the preparation of the statement of cash flows will be examined. The need for critical thinking and ethics in accounting work will be interjected throughout the course. Due to the complexities of this course, four classroom hours are required to present and review the material. PREREQUISITE: ACCT-310.

BUSN-101 — OFFICE ACCOUNTING 1 3 credits
An introductory course covering the basic structure, concepts and principles of accounting. Emphasis is placed upon the daily record keeping, classification and summarization of the financial information which flows within a service and merchandising sole proprietorship. The accounting cycle including statement presentation is examined along with such areas as cash, receivables, payables, payroll and taxes. Both manual and computerized systems will be explored. (This course is restricted to Office Information Technologies students.) Transfer students should be taking ACCT-110.

BUSN-106 — MEDICAL ASSISTANT RECORDKEEPING 1 credit
This course is designed to introduce the medical assistant to the basics of medical office recordkeeping. A brief survey of the methods and procedures of billing, banking, and bookkeeping will be presented.

BSTS-143 — BUSINESS STATISTICS 3 credits
Descriptive methods of collecting, organizing, analyzing, interpreting, and presenting numerical data are examined. Elementary probability concepts and distributions, sample distributions, and statistical inference are emphasized. PREREQUISITE: ALGB-093, ALGB-097, or math placement of MATH-101.

Courses will be offered subject to sufficient enrollment.

FINANCE

FINC-110 — INTRODUCTION TO FINANCE 3 credits
This course is designed to acquaint the student with the manner in which the financial system functions and with the techniques used to reach financial decisions. Major topics to be studied include the nature of money and financial institutions, central banking, securities markets, managing and financing of organizational assets. Special emphasis is given to financial decision-making.
PREREQUISITE: Completion of DWRT-099

FINC-310 — MONEY AND BANKING 3 credits
The changing nature and functions of money are studied in considerable detail. The role of the banking system as a creator of money and credit is analyzed. The course includes an extensive study of non-bank financial intermediaries. A macroeconomic model is developed within which the relative efficiency of monetary and fiscal policy is examined. PREREQUISITE: FINC-110.

FINC-410 — INVESTMENTS 3 credits
This is a beginning course in investment management with special emphasis on the principles governing individual and institutional investment programs. Topics covered include the mechanics of investment, investment media, securities analysis and portfolio management. PREREQUISITE: FINC-110.

FINC-411 — MANAGERIAL FINANCE 3 credits
The principal focus of Managerial Finance is on decisions and actions that are undertaken in light of the firm's objectives. Certain key concepts and commonly used tools of financial analysis are developed. Included are such topics as ratio analysis, sources and the use of funds analysis and financial control techniques. This material provides a useful overview of finance, and the ideas and terminology developed here facilitate an understanding of all the other parts of the course. Topics to be covered include decisions involving working capital, long-term assets, sources and forms of long-term

financing, financial structure and leverage and cost of capital calculations. PREREQUISITES: FINC-110, ACCT-210.

Courses will be offered subject to sufficient enrollment.

BUSINESS LAW

BLAW-310 — BUSINESS LAW 1 3 credits
The primary purpose of a course in business law is to develop an understanding of the legal framework of business—the basic principles of law that apply to business transactions. Since the students of the course are not seeking training as lawyers, preventive law becomes an important objective. Emphasis is placed on contracts, agency, and employment. PREREQUISITE: ENGL-100.

BLAW-311 — BASIC LEGAL CONCEPTS 1 credit
The course content is designed to acquaint medical personnel with various legal aspects germane to their profession, and with applying these principles to medical situations.

BLAW-312 — LEGAL ENVIRONMENT OF BUSINESS 3 credits
This course introduces the student to the legal environment as it affects new and small businesses. The course will cover areas of the law such as business forms and formation, contracts, and the uniform commercial code, intellectual and other property rights, the employment relationship, insurance, and other topics intended to aid students in understanding their rights and obligations under the law.
PREREQUISITE: ENGL-100.

BLAW-410 — BUSINESS LAW 2 3 credits
The purpose outlined in Business Law 1 is continued with emphasis upon personal property and bailments; the law of sales; commercial paper including promissory notes, drafts and checks; real property arrangements; and international transactions.
PREREQUISITE: BLAW-310.

Courses will be offered subject to sufficient enrollment.

MANAGEMENT

MANG-110 — PRINCIPLES OF MANAGEMENT 3 credits
This course provides the student with an introduction to the art and sciences of management. A detailed analysis is made of the planning, organizing, leading, and controlling functions. Particular emphasis is placed upon the decision-making process.
PREREQUISITE: None

MANG-310 — HUMAN RESOURCE MANAGEMENT 3 credits
The primary aim of a course in personnel management is to provide an understanding of the role of the personnel department in the development and administration of the personnel program and the processes relating to it. Areas of study include the basic functions relating to the recruitment, selection, training, motivation, and remuneration of employees. PREREQUISITE: MANG-110.

MANG-312 — WOMEN, MANAGEMENT, AND LEADERSHIP 3 credits
This course is designed to prepare women to be effective participants and leaders in organizational settings. Students will examine societal, organizational, and personal

expectations of women's leadership in organizations. Objectives of the course are: 1) to develop an appreciation of cultural differences in women's abilities to be effective leaders; 2) to increase understanding of leadership styles through assessment of attitudes, values, and behaviors in the organization; 3) to develop confidence in the leadership styles of women, and to develop strategies for the effective application of these styles in organizational settings: and 4) to increase knowledge of leadership theory as well as its relevance to women's experiences in organizations.
PREREQUISITE: MANG-110 or SMBE-112. *Offered Periodically*

MANG-335 — LEADERSHIP 3 credits
This course examines the actions leaders take to build effective teams and organizations. Major leadership theories and concepts are covered, including creating a mission/vision, situational leadership, 3C leadership mode, servant/leader, influencing skills,introducing and managing change, and team building. PREREQUISITES: SMBE-116 or MANG-110.

MANG-410 — LABOR RELATIONS 3 credits
This course is designed to expose the student to the philosophy, activities and objectives of the American labor movement. Areas of analysis include the history of unionism, labor legislation and the search for institutional security. Particular emphasis is given to the nature, content, negotiation, and administration of a collective bargaining agreement. PREREQUISITE: MANG-110.

SMBE-421 — SMALL BUSINESS FORMATION 3 credits
This course is designed to expose the non-business student to a practical discussion of the principles and problems of owning and updating a small business. The course will provide a step-by-step, no nonsense, "how to" approach in establishing a new business as well as examining the basic operating problems faced by the small business manager in an ongoing enterprise. The main objective of the course is to help the non-business student avoid some of the pitfalls of starting and operating a small business. PREREQUISITES: None (This course is restricted to the non-business student.)

MANG-427 — ORGANIZATIONAL BEHAVIOR 3 credits
This course examines the underlying sources, processes, and consequences of human behavior in organizations. The principles of contemporary behavioral science are used to analyze, understand, predict, and control that behavior. Since organizational behavior is viewed as the result of the interaction of individuals, groups, and of the organization itself, the human element is emphasized in the analysis of organizational design and management.
PREREQUISITES: MANG-110, and SOCL-100 or PSYC-100.

Courses will be offered subject to sufficient enrollment.

GENERAL BUSINESS

Students must place into DRDG-092 (reading) or higher and ALGB-081 or ALGB-087 or higher, or be exempt, to be permitted to enroll in ***any*** *business course. Being enrolled in DWRT-099 (Review for College Writing) does not change this requirement.*

SMBE-112 — SMALL BUSINESS MARKETING 3 credits
The various aspects of the marketing function will be tailored to the small business organization. This course is designed to teach students sales techniques, sales forecasting, and territorial structuring. In addition, the marketing mix of product or service, various types of advertising and sales promotion, place and distribution including site and strategies will be evaluated. PREREQUISITE: None

SMBE-116 — INTRODUCTION TO SMALL BUSINESS MANAGEMENT 3 credits
This course is designed to expose the student to the challenges of operating and managing a small business. Students will study the evolution of management theories. Focus will be placed on managerial principles as related to a small business. Principles emphasized will include planning, organizing, leading and controlling functions, and the decision-making process. PREREQUISITE: Basic department requirements.

SMBE-124 — EXPLORATION OF ENTREPRENEURSHIP 1 credit
Who is an entrepreneur? What is entrepreneurship? What is an entrepreneurial career path? These questions are becoming more and more prevalent. This course is designed to provide students with a systematic exploration of entrepreneurship. Students will explore the entrepreneurial aspects of pioneer life during the settlement of the American West up through present and future day entrepreneuring in the U.S. and throughout the world. Students will further explore and discover that the path to successful entrepreneurship is ever-changing as the art and science of entrepreneuring is taking on a new perspective: entrepreneurs are made, not born. This course explores the ingredients needed to venture start-up, highlights a diverse group of opportunity areas to get your creative juices flowing, and points out some trendsetting statistics about entrepreneurship. Practical application of the entrepreneurial process is also discussed throughout the course, as well as the academic requirements for successful venturing.

SMBE-125 — INTRODUCTION TO ENTREPRENEURSHIP 3 credits
This course is designed to introduce students to the entrepreneurial process from conception to birth of a new venture. Students will examine elements in the entrepreneurial process — personal, sociological, and environmental — that give birth to a new enterprise. Critical factors for starting a new enterprise such as alternative career prospects, family, friends, role models, the state of the economy and the availability of resources will be explored. Students will be introduced to practical tools they can use to further their careers in business, both in entrepreneurship and in more traditional company environments. This course simulates the experiences that entrepreneurs undergo in conceiving, launching, and operating new businesses. The course enables students to evaluate an entrepreneurial career for themselves. In doing so, it provides want-to-be entrepreneurs with a framework for selecting, funding, and starting their own new ventures. PREREQUISITE: None

BUSN-330 — SUPERVISORY MANAGEMENT 3 credits
This course examines the unique role of the first-level manager and the skills essential to effective performance. Because supervisors deal primarily with immediate subordinates, emphasis is placed on interpersonal skills and relationships, particularly communication, motivation, performance reviews, conflict management, and decision-making/problem solving. Additional areas of discussion include federal employment loans and leadership. PREREQUISITE: SMBE-116 or MANG-110

BUSN-335 — LEADERSHIP 3 credits
This course examines the actions leaders take to build effective teams and organizations. Major leadership theories and concepts are covered including creating a mission/ vision, situational leadership, 3C leadership mode, servant-leader, influencing skills, introducing and managing change, and team building. PREREQUISITE: SMBE-116 or MANG-110.

SMBE-343 — SMALL BUSINESS SEMINAR 3 credits
This course is designed to expose the student to the challenges of starting, operating, and evaluating the effectiveness of the small business. Major topics studied include entrepreneurial opportunities, the preparation of a business plan, small business marketing, and the management of small business operations. Financial and administrative controls will be emphasized. The course will be outlined and taught on a case study basis to apply the principles and techniques to the corresponding cases in the text. PREREQUISITES: ACCT-110, SMBE-112, SMBE-116, FINC-110.

SMBE-440 — ENTREPRENEURIAL FIELD STUDIES 3 credits
In this course students will apply their small business knowledge to a real situation. Students will work individually or in a group of no more than three on a significant entrepreneurial project. The curriculum focuses the student on specific concepts, expertise and skills that are the key to successful business start-ups. A typical project involves problem definition, defvelopment of the team work plan, completion of research and analysis, derivation of conclusions and recommendations, possibly some implementation, and generation of a final report. This course is based on the concept of balanced mentorship, which benefits both student and the entrepreneur mentor. Students will be assigned to a start-up firm or a firm developing at a business incubator (STCC's Scibelli Enterprise Center.) PREREQUISITE: SMBE-125, SMBE-112, ACCT-110, SMBE-116, BUSN-335. Restricted to Entrepreneurship majors

Courses will be offered subject to sufficient enrollment.

MARKETING

MRKT-110 — PRINCIPLES OF MARKETING 3 credits
This course emphasizes a well-rounded basic approach that provides maximum exposure to the role of marketing in today's economy which is a marketing economy—not just for marketers of conventional products and services, but also for government, social institutions and social causes and the professions. To achieve this exposure, an overview is presented of the marketing process including marketing research, consumer behavior, market segmentation, target consumers, product strategy, packaging, branding, pricing and the promotional mix. The course will service two types of students—those who want a knowledge of marketing fundamentals, principles and activities to meet specific personal or professional needs, and those who plan a career in marketing.

MRKT-310 — RETAILING 3 credits
The major goals of the course are to enable the student to become a good retail planner and decision maker and to help focus on change and adaptation to change. The student will be introduced to the technical knowledge necessary for retail management. An overview of retailing is presented, including such vital areas as organizational structure, physical security, consumer behavior, personnel management, marketing research, merchandising, planning promotional activities, store planning and inventory control. PREREQUISITE: MRKT-110.

MRKT-311 — ADVERTISING AND PROMOTION 3 credits
This course is designed to teach students advertising's fundamental principles and to familiarize them with its strategic, managerial, creative, and financial elements. The student will be exposed to developing advertising strategy, media strategy and selection, creative strategy and execution, budgeting, and control, utilizing the case study method where feasible. PREREQUISITE: MRKT-110.

MRKT-312 — ADVERTISING PRINCIPLES 3 credits
An introductory textbook will be used to cover the field of advertising as completely as possible. The course will not specifically take a business point of view or a marketing point of view, but instead, an advertising point of view. The course will include a variety of disciplines and specialties. Such things as research, media buying, print and broadcast production, sales promotion, product publicity, budgeting, scheduling, and even business presentations will be covered. The main purpose of the course is to introduce the non-business student to the richness and variety of the real world of advertising. (This course is restricted to the non-business student.)

MRKT-333 — MARKETING FOR THE INTERNET 3 credits
Basic marketing concepts will be applied to e-commerce. These concepts include market research, consumer behavior, market segmentation, target consumers, product strategy, branding, pricing, and promotional mix. An introduction to strategic, tactical, and operational planning aspects of the marketing process will also be covered. The unique reasons e-commerce consumers make purchases will be compared and contrasted to the reasons consumers in general make purchases. Attention will also be given to promoting a website. Sample sites will be analyzed, and possible strategies for enhancing exposure developed. PREREQUISITE: CMPA-103.

MRKT-410 — CONSUMER BEHAVIOR 3 credits
The aim of this course is to understand why people buy as the foundation for developing concepts for meeting consumer needs through selling, advertising, distribution and related activities. Behavioral considerations affecting consumer purchase decisions are analyzed. These include the personality, motivational, cognitive and attitudinal aspects, along with the social influences which affect consumer interaction with business firms. PREREQUISITE: MRKT-110.

MRKT-411 — SALES AND SALES MANAGEMENT 3 credits
This course will introduce the student to the fields of sales and sales management. A comprehensive coverage of the tasks of the sales manager as organizer, administrator, and decision maker will be provided in a systematic manner. The most contemporary concepts in sales management as well as the more traditional practices will be explored by integrating both theory and practice. PREREQUISITE: MRKT-110.

Courses will be offered subject to sufficient enrollment.

Chemistry

CHEM-101 — SURVEY OF CHEMISTRY 1 4 credits
This course can satisfy the science requirement for non-science majors. A survey of topics in inorganic chemistry including: problem-solving strategies with emphasis in the use of dimensional analysis (conversion factors); atomic and molecular structure; periodic properties; stoichiometry; gas laws; acid-base behavior; solutions; nomenclature; chemical bonding; and Lewis structures. Three one-hour lectures and one three-hour lab per week. PREREQUISITE: ALBG-083 or ALGB-087 or equivalent.

CHEM-103 — GENERAL CHEMISTRY 1 4 credits
This course is for science majors, engineers, or students transferring to pre-med, pre-vet, pre-dental, or pharmacy programs. Critical thinking is stimulated through the solution of multi-step problems. Topics include: dimensional analysis; atomic, molecular and electronic structure; stoichiometry; solubility; precipitation and redox reactions; gases; periodic table and periodic trends; and thermochemistry.Three one-hour lectures and one three-hour lab per week. PREREQUISITE: One year of high school chemistry or physics and placement at MATH-100 or higher level math course; or permission of dept. chair.

CHEM-203 — GENERAL CHEMISTRY 2 4 credits
A continuation of CHEM-103. Critical thinking is stimulated through the solution of multi-step problems. Topics include: chemical bonding; molecular geometry and hybridization; intermolecular forces; solutions; kinetics; chemical equilibrium; acids and bases; thermodynamic functions; and electrochemistry. Three one-hour lectures and one three-hour lab per week. PREREQUISITE: CHEM-103. Add-on honors component available.

CHEM-320 — ORGANIC CHEMISTRY 1 4 credits
This course is designed for transfer students with majors in chemistry, biology, pre-med, or pre-dental. Reaction, synthesis and mechanism of organic reactions will be studied. Three one-hour lectures and one three-hour lab per week. PREREQUISITE: CHEM-203 or permission of instructor.

CHEM-355 — INSTRUMENTATION FOR CLINICAL LABORATORY SCIENCE 2 credits
This course is for students in the Clinical Laboratory Science program. Basic electronics and the principles of modern clinical instrumentation are reviewed. Topics include spectrophotometry; fluorescence; chemiluminescence; turbidimetry and nephelometry; and nucleic acid probe techniques. The laboratory will consist of demonstrations and field trips to local hospital laboratories to view the procedures discussed in the lecture. One two-hour lecture and one lab session per week (seven weeks.)
PREREQUISITE: CHEM-101.

CHEM-370 — INDEPENDENT CHEMISTRY STUDY 1 1, 2, 3, or 4 crs.
This course is designed for students with interest in conducting undergraduate research in chemistry on a current topic, under the supervision of a chemistry professor. Laboratory work is strongly emphasized. PREREQUISITE: Permission of Department Chairperson.

CHEM-420 — ORGANIC CHEMISTRY 2 4 credits
A continuation of CHEM-320. Emphasis is on basic reactions and their mechanisms, nomenclature and spectral identification through NMR and IR spectroscopy. Laboratory work involves organic synthesis by microscale and macroscale techniques. Three one-hour lectures and one three-hour lab per week. PREREQUISITE: CHEM-320.

CHEM-470 — INDEPENDENT CHEMISTRY STUDY 2 1, 2, 3, or 4 crs.
A continuation of CHEM-370. This course is designed for students with interest in conducting undergraduate research in chemistry on a current topic, under the supervision of a chemistry professor. Laboratory work is strongly emphasized. PREREQUISITE: CHEM-370 or permission of Department Chairperson.

Civil Engineering Technology

CIVL-115 — CONSTRUCTION MATERIALS AND METHODS 3 credits
A survey of common materials and methods used in building construction is presented. Materials covered include wood, glue-laminated timber, steel, non-ferrous metals, concrete, plastics, and insulation. Emphasis is placed on their physical properties, use in construction, and construction techniques for completing the project. Three lecture hours. PREREQUISITE: DWRT-099.

CIVL-120 — ARCHITECTURAL DESIGN 4 credits
An introduction to architectural design and technical drawing techniques used to develop working drawings and 3D models for architectural projects. This is the cornerstone course for all future architectural and civil engineering course work. Emphasis is on residential design/construction and will include site planing, foundations, floor plans, elevations, sections, isometric renderings, lighting/electrical plans, and kitchen plans. Students will have the opportunity to design their own "vacation" homes, learn the fundamentals of blueprint reading, and use the blueprint process to generate their own documents. Structural components, building specifications, commercial construction, and applicable building codes will be introduced. Students will develop a portfolio of drawings that will be used as part of the portfolio requirement for future architectural course work and professional placement. Two lecture hours and six laboratory hours. PREREQUISITE: None.

CIVL-125 —ARCHITECTURAL CAD 1 3 credits
This course is an introduction to the dynamic world of computer-aided design (CAD) using AutoCAD. Students will learn the terminology, capabilities, and operation of this powerful design tool. Students will develop a portfolio of architectural drawings, including floor plans, elevations, sections and details for a light commercial bulding. Drafting fundamentals and the use of orthographic projection will be reviewed. Students will also be introduced to PowerPoint and will learn to use this software to create professional quality presentations. Two hours lecture. COREREQUISITE: CIVL-125L

CIVL-220 — CONSTRUCTION ESTIMATING 3 credits
This course is an introduction to the detailed and challenging profession of construction estimating. Students will learn how the wide range of construction materials, construction methods, and business practices impact the overall cost of a construction project. Students will use plans and specifications from a recently-built construction project to produce a detailed construction estimate for that project and better understand the wide range of direct, indirect, and general overhead expenses that impact the cost of a project. Students will be introduced to a variety of cost data resources used in professional practice, and will work on an independent bid proposal for a commercial construction project, culminating in a bid opening. Students will build on the technical drawing skills mastered in CIVL-120. Two hours lecture. COREQUISITE: CIVL-220L.

CIVL-225 — ARCHITECTURAL CAD 2 3 credits
This course is a continuation of CIVL-125 with the purpose of using AutoCAD to produce architectural drawings for residential and light commercial buildings. Site plans, floor plans, elevations, sections, and construction details are studied, building on the skills learned in CIVL-120 to develop a complete set of working drawings. Students will build a portfolio of drawings that can be used as part of the portfolio requirement for future architectural course work or job placement.
PREREQUISITES: CIVL-120, CIVL-125

CIVL-235 — HYDRAULICS AND HYDROLOGY 3 credits
Concepts of continuity, energy, and hydrostatic pressure are included. Pumping systems are designed. Basic hydrological principles of rainfall, runoff, and infiltration are discussed as part of sizing storm drainage system components. A computerized runoff model is introduced. Wetland identification, protection, and remediation are discussed along with the role of regulatory commissions/agencies. The laboratory is devoted to design and problem solving. Two lecture hours and three laboratory hours.
PREREQUISITE: ALGB-087.

CIVL-310 — SURVEYING 1 4 credits
The theory and practice of construction surveying. Field practice is given in the use of tape, level, total station and data collectors. This is a laboratory-oriented course encompassing baseline, differential, profile and cross-section leveling, establishment of contours, traverse closures, construction stakeout of buildings and property lines, and development of topographic maps utilizing engineering software and data collector input from field operations. PREREQUISITE: MATH-132.

CIVL-325 — SOILS AND FOUNDATIONS 4 credits
The theory and concepts of soil mechanics and foundation design. Topics include soil types, behavior, identification, classification; soil properties; site investigation, methods, and goals; permeability, surface tension, capillarity, and related concerns; shear strength; sub-surface stresses, settlement, sizing footings; groundwater contamination; landfill liners and covers; soil compaction. The weekly three-hour lab is devoted to geotechnical testing and in-depth applications of foundation design theories. Two hours lecture, three-hour lab. PREREQUISITE: MATH-132; COREQUISTE: CIVL-325L

CIVL-345 — STATICS AND STRENGTH OF MATERIALS 4 credits
An introduction to stress and force theories as they apply to the equilibrium of rigid bodies and particles. Principles of resultant forces, free body diagrams, tension and compression members, truss analysis, applied forces to beams and columns, frictional forces, and torsion are studied. Additional topics include stress and strain, mechanical properties of engineering materials, factors of safety, centroids, and moments of inertia. The weekly three-hour lab is devoted to in-depth problem analysis and solutions that expand classroom theories, plus laboratory tests that demonstrate the practical applications of these theories. PREREQUISITE: MATH-132.

CIVL-410 — REINFORCED CONCRETE ANALYSIS 3 credits
Topics include batching, transporting, placing and curing concrete. Standard ASTM quality control tests are conducted, and Class A Concrete Field Certification is completed. Reinforced beams, slabs, and footings are analyzed and designed. Wall stability analysis is conducted. Weekly laboratories are devoted to design and concrete testing. Two lecture hours and three laboratory hours. PREREQUISITE: CIVL-345.

CIVL-420 — CONSTRUCTION MANAGEMENT 3 credits
A study of specialized business and management topics which are of particular interest to the construction industry. Topics include basic operational patterns, types of

buisness ownership and company organization, the competitive bid process including specifications and bid openings, subcontracting procedures, contract bonds, construction insurance, accounting processes including depreciation, job scheduling with introduction to critical path method, labor law, and job-site safety and OSHA regulations. PREREQUISITE: DWRT-099; CO-REQUISITE: ENGL-100.

CIVL-430 — TRANSPORTATION ENGINEERING 3 credits
A study of the practical application of transportation engineering on roads and highways. Topics include: highway design, earthwork, geometry, standards, construction, subdrainage systems, curve layout, residential subdivision, and parking lot layout. Specialized investigations for transportation planning, design and layout are included. Weekly laboratories are devoted to design, layout, and computations.
PREREQUISITE: CIVL-310 or permission of instructor.

CIVL-446 — STRUCTURES 3 credits
A continuation of the stress and force theories from CIVL-345 Statics is presented as they apply to structural design. The design of structural steel floor, beam, girder, and column systems begins with the development of shear and bending moment diagrams. The design process is studied in depth, utilizing AISC codes, with particular emphasis placed on shearing, bending, and deflection induced on steel load-carrying members. The lab periods are devoted to practical design procedures and analysis of various structural members, especially beams, girders, columns, and connections, with laboratory experiments to reinforce classroom theory. Students will also have the opportunity to review and discuss the design and construction of major bridge and high-rise buildings, and the well-documented causes of some major structural failures. Two hours lecture. PREREQUISITE: CIVL-345; COREQUISITE: CIVL-446L

CIVL-451— ARCHITECTURAL STUDIO 4 credits
The Architectural Studio course will serve as a capstone experience for the Architectural associate degree option. In this course, the student will be encouraged to use artistic expression, creative thinking and problem solving to design an original architectural project. The student will develop presentation skills using presentation elevations and plans as well as isometric, one-point, and two-point perspective drawings. Students will also have the opportunity to use architectural scale models as a presentation tool. Students will be required to assemble a portfolio of the projects from this class as well as projects from their previous design-related studies and display them in a final juried presentation. Three hours lecture and thee-hour laboratory. PREREQUISITE: CIVL-225.

CIVL-460 — PROJECT SCHEDULING 3 credits
An introduction to construction project planning and scheduling, using project scheduling software. A principal focus of this course is on planning projects and controlling costs. Lectures expand pertinent aspects of job-site safety, and address construction project legal issues such as sexual harassment, workplace discrimination, and substance abuse, which are tied to worker and employer responsibilities. The three-hour computer lab will be devoted to project scheduling software applications. PREREQUISITES: CMPA-105, ENGL-100; COREQUISITE: CIVL-460L.

CIVL-470 — GEOGRAPHIC INFORMATION SYSTEMS 3 credits
Geographic Information Systems (GIS) are software tools used by industry and government for processing, viewing, and analyzing spatial data. The course will cover application of ArcView software by ESRI to establish a dataset and develop the data into useful information. Example datasets from the fields of public health, planing, civil engineering, public works and the environmental monitoring/remediations field will be used. Two hours of lecture. PREREQUISITES: ALGB-097, ENGL-100, CMPA-105.

Clerical Office Assistant
(*See* Office Information Technologies)

Clinical Laboratory Science

CLLS-101 — INTRODUCTION TO THE CLINICAL LAB 4 credits
An overview and introduction to laboratory safety and basic skills as used in specimen processing and laboratory information systems, phlebotomy, urinalysis, hematology, chemistry, immunology, immunohematology, and microbiology. Universal precautions and proper procedures in regard to specimen processing will be taught to the student. Laboratory mathematics, quality control, and the proper use of instrumentation will be presented as used in the hospital, physician's office laboratory, and laboratory science area. CO-REQUISITE: CLLS-101L

CLLS-103 — MEDICAL LABORATORY SAFETY *(5 weeks)* 1 credit
This course introduces the allied health student to medical safety rules and OSHA guidelines. Strict observances of these rules and practices is essential in the medical field. An understanding and implementation of these rules are necessary before beginning work in the clinical laboratory, phlebotomy, and related work areas. This course will make the student aware of the hazards he or she will encounter, how to safely handle blood-borne pathogens and biohazardous material, and how to successfully prepare for an inspection. Recommended for all allied health students, and required for Clinical Laboratory Science students.

CLLS-140 — CLINICAL LABORATORY ASSISTANT SKILLS 1 4 credits
This is the first part of the Clinical Laboratory Skills course. The following topics are included at the CLA level: terminology phlebotomy, donor room collection, screening and processing, basic laboratory math, microscopy, customer service skills, professional ethics, and laboratory information systems. CO-REQUISITE: CLLS-140L

CLLS-141 — CLINICAL LABORATORY ASSISTANT SKILLS 2 4 credits
This course is a continuation of Clinical Laboratory Assistant Skills 1, and includes specimen processing with data entry, coding and reporting, quality assurance and quality control. The correct use of small instruments for ancillary testing in urinalysis, hematology, and chemistry is covered as well as microbiology specimen processing and testing. All of these topics and skills are at the CLA level. PREREQUISITE: Completion of CLLS-140 with a grade of C (75) or better. CO-REQUISITE: CLLS-141L

CLLS-150 — CLINICAL EXPERIENCE 1 *(10 weeks)* 1 credit
Supervised clinical experience is obtained in a hospital clinical laboratory to enhance student learning and to apply classroom theory to the laboratory practice in a clinical setting. Experience will be at the assistant level in all areas of the laboratory to include phlebotomy, specimen processing, and laboratory information systems. CONCURRENT: CLLS-140

CLLS-155 — CLINICAL EXPERIENCE 2 2 credits
Continuation of CLLS-150. CONCURRENT: CLLS-141.

CLLS-180 — PRINCIPLES AND PRACTICE OF PHLEBOTOMY 4 credits
This course is designed to prepare an individual to perform venipuncture and capillary puncture in order to obtain blood specimens for diagnostic procedures. The course will include anatomy and physiology of the circulatory system, safety and confidentiality, communication, quality control and processing of specimens, miscellaneous procedures, and multiskilling for the phlebotomist. Upon completion of all components of the course, individuals will be eligible to sit for a certification exam. CO-REQUISITE: CLLS-180L

CLLS-212 — MEDICAL MICROBIOLOGY 1 5 credits
Medical Microbiology 1 is an introduction to clinical microbiology laboratory and the routine medically significant organisms. The course will include the principal characteristics and procedures used in clinical microbiology to identify normal flora and medically significant bacteria. The laboratory identification of the organism is based on morphological, cultural, and biochemical characteristics. Additional topics will include safety in the microbiology lab, quality control, and antimicrobial sensitivity testing. PREREQUISITE: Successful completion of CLLS-101 and CLLS-103. CO-REQUISITE: CLLS-212L

CLLS-300 — HEMATOLOGY AND COAGULATION 4 credits
The study of blood in health and disease to include genetics, the origin, development and function of human blood cells, and a review of the vascular and coagulation systems. Normal and abnormal findings will be studied through manual and automated procedures. Specific topics include: CBC and coagulation profile, normal values, quality control, and blood disorders. PREREQUISITE: CLLS-101, CLLS-103. CO-REQUISITE: CLLS-300L

CLLS-302 — CLINICAL CHEMISTRY 4 credits
This course is designed to acquaint the student with the theory and function of the clinical chemistry laboratory. Course of study includes analysis of blood and body fluid in routine and emergency testing in the clinical chemistry lab. The theory of manual testing as it is applied to automated procedures, interpretation and analysis of test results and how these correlate to the patient's clinical diagnosis will be stressed. PREREQUISITE: CLLS-101, CLLS-103; CO-REQUISITE: CLLS-302L.

CLLS-311 — MEDICAL MICROBIOLOGY 2 3 credits
Medical Microbiology 2 is a continuation of Medical Microbiology 1. The organisms that will be studied are those that require specialized techniques in collection, and biochemical and serological identification. These pathogens include anaerobic bacteria, specialized gram negative organisms, parasites, viruses, and fungi that are medically significant to man. Case studies relating to these organisms and other medically significant organisms and the diseases they cause will be studied. The use of automation and new technologies for identification will be included. PREREQUISITE: Successful completion of CLLS-212; CO-REQUISITE: CLLS-311L

CLLS-315 — IMMUNOHEMATOLOGY 2 credits
Red blood cell immunology as it relates to ABO/RH, typing procedures, compatibility testing, and antibody detection and identification techniques will be presented and the clinical significance of each will be identified. Blood donors, component preparation, and transfusion practices will be reviewed, in addition to recordkeeping and quality control procedures. PREREQUISITE: CLLS-300; CO-REQUISITE: CLLS-315L.

CLLS-409 — LABORATORY SKILLS IN NUCLEAR MEDICINE *(7 weeks)* 1 credit
Instruction in basic laboratory skills, including safety/biohazard precautions, pipetting and spectrophotometric techniques. Students will review in-vitro labeling assays as

RIA/EIA using monoclonal antibodies in test procedures. Specimen collection, labeling, handling, processing, testing, and use of universal precautions will be reviewed as well as quality control procedures used in immunoassays. PREREQUISITES: BIOL-132, BIOL-232; CO-REQUISITE: CLLS-409L.

CLLS-412 — IMMUNOLOGY *(7 weeks)* 2 credits
A study of the nature of the immune system is the focus of this course. Topics include the nature of immunity, antigens, and the immune response. This is the fastest-growing and a very high technology area. Serological procedures will be presented and their diagnostic significance will be emphasized. Discussions include monoclonal antibodies and EIA detection procedures used in microbial and/or immune disorders. PREREQUISITES: CLLS-101, CLLS-300; CO-REQUISITE: CLLS-412L.

CLLS-420 — CLINICAL PRACTICUM 1 *(2 weeks)* 1 credit
Supervised clinical experience is obtained in an affiliated laboratory under the supervision of a qualified medical technologist and pathologist. The rotation schedule provides experience in the following departments: Immunohematology, Chemistry, Hematology, Microbiology, Immunology, Phlebotomy, and Urinalysis. PREREQUISITES: Successful completion of core curriculum with a minimum passing grade of "C", (75) in all Department courses, and a minimum QPA of 2.0.

CLLS-421 — CLINICAL PRACTICUM 2 6 credits
Continuation of CLLS-420.

CLLS-422 — CLINICAL PRACTICUM 3 *(7 weeks)* 3 credits
A continued practicum for students who have successfully completed CLLS-420 and CLLS-421 and who can demonstrate achievement of planned competencies in these courses within the time frame. Approval of the Department Chairperson/CLLS Medical Director is a prerequisite for registering for this course.

CLLS-440 — CLINICAL LABORATORY SEMINAR 2 credits
This seminar course will emphasize the application of theory to practice in the clinical setting. Discussions of shared student experiences will include professionalism, patient interaction, case studies to foster critical thinking, and certification review. This course will meet simultaneously with CLLS-421. PREREQUISITE: completion of semesters 1, 2, and 3.

CLLS-450 & CLLS-451 — CLINICAL LAB PRACTICUM 4 5 credits each
This clinical practicum includes all contents of Clinical Laboratory Practicum 1, 2, 3 (CLLS-420, 421, 422). It is designed for individuals who have work experience in the field and can perform all competencies in a shorter length of time. To qualify for this course students must be enrolled in the CLLS department, have a minimum QPA of 2.0, one year full-time work experience in the clinical laboratory field, and approval of the department chairperson.

Computer-Aided Drafting and Design
(*See* Mechanical Engineering Technology)

Computer-Aided Manufacturing
(*See* Mechanical Engineering Technology)

Computer Information Technologies
(*See* Information Technologies)

Computer Science Transfer
Option to Engineering & Science Transfer

CSCI-100— INTRODUCTION TO COMPUTER SCIENCE 4 credits
This course is designed to provide a foundation for more advanced courses in computer science and engineering. The course will begin with an introduction to computer systems and the understanding of the implications and effects of the computer in our social order. Web page design will be discussed in this course. Students will be asked to create and post their portfolio on the web. The remainder of the course will be on the Visual Basic programming language. The principles of good programming style and structure will be stressed. The class will meet for three class hours and three lab hours each week. COREQUISITE: MATH-132, MATH-145, MATH-232, or MATH-155

CSCI-110 — COMPUTER SCIENCE 1 4 credits
This course assumes no prior knowledge of computer programming. The course starts with the basics of problem solving and algorithm development using the standard control structures of sequencing, selection, iteration, and function abstraction. A brief introduction to object-oriented design perspective is fully introduced and integrated into the student's problem-solving methodology. The C++ programming language will be used in this course. A summary of the topics contained in the course include: an overview of computer science, problem solving, input and output techniques, functions, selection statement, repetitious statements, strings, structured data with classes, files, and arrays. COREQUISITE: MATH-132 or MATH-145.

CSCI-111— INTRO. TO THE JAVA PROGRAMMING LANGUAGE 4 credits
This course is designed specifically for students with no programming experience. The course provides first-time programmers an excellent choice for programming using the Java programming language. With this knowledge, students will develop programming skills in the areas of object oriented and Java technology. Through the use of the Sun Java JDK, students explore the principles of object-oriented programming, including classes and inheritance. Topics include compiling Java applications, variables and data types, operators, control flow, classes and objects. While the course focuses on the development of Java applications, students will be exposed to rudimentary GUI design and event handling to develop simple Java Windows-based

applications. By the end of the class, students will be able to create simple programs using Java technology, and read and edit Java technology source code. A three-hour lab is required with this course. CO-REQUISITE: MATH-132 or MATH-145.

CSCI-210 — COMPUTER SCIENCE 2 4 credits
This course assumes that the student has taken one semester of computer programming, and is a logical continuation of CSCI-110. A quick review of the topics discussed in CSCI-110 will lead to discussions on more advanced topics which include recursive programming, storage techniques, pointer variables, dynamic variables, simple data structures such as multidimensional arrays and linked lists, stacks, queues, as well as internal searching and sorting algorithms. Algorithms analysis will be discussed as it applies to space and time issues. User-defined classes will be an integral part of the problem-solving process. The C++ programming language will be used in this course. PREREQUISITE: CSCI-110.

CSCI-211— INTERMEDIATE TOPICS IN JAVA PROGRAMMING 4 credits
This course teaches students the syntax of the Java programming language; object-oriented programming with Java; creating graphical user interfaces (GUI), exceptions, file input/output (I/O), threads, and networking. Programmers familiar with object-oriented concepts will learn how to Java applications and web-based applets. The course makes use of the Java 2 Software Development Kit (SDK). Students who can benefit from this course are programmers who are interested in adding the Java programming language to their list of skills, and students who are prepraring for the Sun Microsystems Java certification exam. Three hours of lecture; a three-hour lab is required with this course. PREREQUISITES: CSCI-110 or CSCI-111; CO-REQUISITE; CSCI-211L.

CSCI-310 — MACHINE AND ASSEMBLY LANGUAGE 4 credits
A study of data representation, instruction sets, and functional units found in typical computers is presented. The focus of this investigation is on the 8088 microprocessor, the processor used in the IBM PC. Topics to be discussed include: number systems, register configuration, instruction sets, addressing modes, program segmentation, arithmetic operations, data structure operations, floating point (8087) operations, and interrupt processing. Borland's turbo assembler and turbo debugger will be used to code and verify assignments. Macros, assemblers, and linkers will also be discussed. PREREQUISITE: CSCI-111.

CSCI-321 — COMPUTER ORGANIZATION & DIGITAL LOGIC 4 credits
Introduction to the analysis and design of combination and sequential logic using Boolean algebra, Karnaugh Maps, and register transfer techniques. Logic design with integrated circuits. Flip-flops, registers, memory, and input/output devices are among the devices to be discussed. A three-hour lab is required with this course.
PREREQUISITES: CSCI-111.

CSCI-401 — DATA STRUCTURES AND ALGORITHMS 4 credits
Analysis of algorithms that manipulate information organized in structures such as lists, trees, and graphs. Simple, circular, multilinked lists. Stacks and queues. Balancing algorithms for tree structures. Advanced search/sort techniques. Hashing methods. Data-base management system design using the techniques discussed. PREREQUISITES: CSCI-111, or permission of instructor.

CSCI-420 — PROGRAMMING IN JAVA 4 credits
The purpose of this course is to guide students in using Java to write stand-alone applications and applets to be run by a Java-enabled web browser. Java is an object-oriented language which syntactically resembles C++. It was designed to be a machine-independent language that is general enough to handle all of our application

needs and yet is safe enough to run over the Internet. It comes with a rich collection of packages (class libraries) with which to build GUIs, display images, and handle network protocols. This course will study Java and its class libraries. Both stand-alone and GUI apps will be written. PREREQUISITE: CSCI-110.

Computer Systems Engineering Technology

CSET-101 — BASIC COMPUTER MAINTENANCE 3 credits
This is an introductory course for people interested in PC-based computer systems. The objective of the course is to provide an introduction to the fundamental concepts of PC use in business and industry. The course starts with an overview of basic PC operating systems and moves into hardware, software, and then networking. A large part of each session will be hands-on, covering basics of computer maintenance and repair. PREREQUISITE: Completion of DWRT-099 or placement in ENGL-100, and completion of ALGB-083 or placement at ALGB-091.

CSET-111— INTRODUCTION TO PROGRAMMING 3 credits
In this course the student will learn programming using the Python language. It concentrates on basic principles of program design, structured programming, objects, and debugging. This course is intended as an introduction to the core principles of programming. CSET-111 is recommended as a first course in programming for novice programmers before attepting C, C++, and Java. It is used as a scripting language on Linux and as a scripting language for some applications that run on Linux. CSET-111 is also suitable for those who want some introductory Linux programming experience. Three hours lecture.

CSCO-170 — CISCO NETWORKING 1 4 credits
This course is the first in a three-course series on Cisco networking. Using a combination of instructor-led, web-based, and hands-on lab materials, students begin to learn how to design, install, and maintain internetworks. Topics include the OSI model, internetworking devices, IP addressing, LAN media and topologies, structured cabling, PC hardware and software, patch cables, installation of structured cabling, cable management techniques, and the use of test equipment. In this course, students will maintain an engineering journal, work in engineering teams, and learn to manage networking projects.

CSET-210 — INTRODUCTION TO COMPUTER SYSTEMS 3 credits
This is an introductory course that will prepare Computer Systems Engineering Technology students for more advanced courses in the department. Hands-on coverage includes popular PC operating systems and hardware. Specific topics include system booting, system configuration, BIOS, disk management, CPUs, bus architectures, power supplies, disk drives, memory, multimedia, field replacable units (FRUs), and network devices. Students learn how hardware devices integrate into and work with an operating system. The Internet is used extensively for research including product documentation, software upgrades, driver upgrades, and product comparision. In the lab students will use a collection of hardware and software components to build, modify, upgrade, and troubleshoot today's popular PC hardware and operating systems.

CSET-242 — COMPUTER PROGRAMMING 3 credits
In this course the student will learn the C language. After an introduction to the C environment, the concepts of data and input/output, operators, expressions and statements, and program flow control will be covered. Next, functions, arrays, pointers and structures, unions and bitfields will be studied. Finally, file input and output, and graphics programming will be introduced. The laboratory portion of this course will allow the student an opportunity to construct, run and test C programs on a PC. PREREQUISITE: ESET-111 Intro to CAET, or permission of instructor.

CSCO-270 — CISCO NETWORKING 2 4 credits
This course is the second in a three-course series on Cisco networking. Using a combination of instructor-led, web-based, and hands-on lab materials, students continue to learn how to design, install, and maintain internetworks. Topics include the OSI model layers 1-7, WANs, routers, using a router, router components, router startup and setup, router configurations, IOS, TCP/IP, and IP addressing and routing protocols. Students will continue to maintain an engineering journal, work in engineering teams, and learn to manage networking projects. PREREQUISITE: CSCO-170.

CSET-310 — MICROCONTROLLER THEORY 3 credits
This course covers the theory of microcontrollers and how they are used as the basic building block for data acquisition and control applications. After an introduction to the history and evolution of microcontrollers, the basic hardware and programmer's model of a typical present-day microcontroller (68HCXX series) is presented. The instruction set and development platform are examined, and methods of interfacing a typical microcontroller to the analog world are studied. The lab portion of the course allows the student to gain experience with microcontroller programming and interfacing techniques. PREREQUISITE: Senior standing or permission of instructor

CSET-333 — MACHINE AND ASSEMBLY LANGUAGE PROGRAMMING 3 credits
Programming in Intel 8086 series assembly language is taught in this course. Assembly language technique and development methods will be covered in detail. Students will be required to write, debug, and document programs in 8086 assembly language. Larger problems and projects are composed of a combination of C and 8086 assembly languages. Additionally, programming topics in Motorola 68HC11 assembly language will be covered as necessary. Documentation and a methodical software development practice will be stressed. The 68HC11EVB is used in digital labs 1 and 2. Use and understanding of standard program maintenance/development utilities such as search, diffs, make and profiler will be required. PREREQUISITES: Senior standing in CSET or permission of instructor.

CSET-343 — LINEAR CIRCUITS 4 credits
This course presents material about the theory and operation of discrete solid state devices such as diodes and transistors. Biasing techniques and practical applications are emphasized. The next portion of the course covers the operational amplifier. Use of the Op-Amp as a building block type of circuit is covered in detail. The laboratory portion of the course allows the student to gain practical hands-on experience in the construction and troubleshooting of typical active circuits such as amplifiers and oscillators using linear integrated circuits. PREREQUISITES: ESET-130 and ESET-230 or ESET-110,115, 210 and 215.

CSET-344 — COMPUTER PROGRAMMING 4 credits
In this course the student will learn the C language. After an introduction to the C environment, the concepts of data and input/oputput, operators, expressions and statements, and program flow control will be covered. Next, functions, arrays, pointers and

structures, unions and bitfields will be studied. Finally, file input and output, and graphics programming will be introduced. The lab portion of this course will allow the student an opportunity to construct, run, and test C programs on a PC. Three hours lecture. PREREQUISITES: ESET-260, CSET-210; COREQUISITE: CSET-344L

CSET-345 — OPERATING SYSTEMS 1 4 credits
This course will introduce the student to network operating systems such as Microsoft Windows 2000 Server and Linux/UNIX through lectures, demonstrations, and discussions. The course covers basic operating system theory, OS services, file systems, scheduling and memory management. The student will also learn how to install and administer popular operating systems, network protocols, and services such as virtual private networking, Routing and Remote Access Service, DHCP, WINS, and DNS. Students will gain experience with data back-up and disaster recovery systems and options. A three-hour lab component is included to give hands-on experience with these topics. PREREQUISITE: senior standing in CSET or permission of instructor, CSET-210, and ESET-260. Three hours lecture. Instructor's consent required. COREQUISITE: CSET-345L

CSET-360 — COMPUTER NETWORKING 1 4 credits
This course introduces the student to the concepts of computer networking. Hands-on coverage will include the basic technologies used in Local Area Networks (LANs) including different networking models and various logical and physical topologies used in common networks such as Ethernet, Token Ring, and FDDI. The transmission of data and different data transmission media will also be studied. Topics including Network Interface Cards (NICs), storage devices, network cabling, printers, and network optimization will also be covered in detail. In the lab, students will use a collection of individual hardware components and software to construct and troubleshoot a complete local area network. PREREQUISITE: CSET-241

CSCO-370 — CISCO NETWORKING 3 & 4 4 credits
This course is the third in a three-course series on Cisco networking. Using a combination of instructor-led, web-based, and hands-on lab materials, students continue to learn how to design, install, and maintain internetworks. Topics include a review of past material, LAN switching, VLANs, LAN design, IGRP, access lists, and IPX. Threaded Case Studies (TCS) are used extensively in this course as students continue working in engineering teams and learn to design, install, and manage networking projects. Additional topics include WANs, WAN design, PPP, ISDN, frame relay, and review for the Cisco CCNA exam. PREREQUISITE: CSCO-270.

Offered Evening

CSET-420 — MICROPROCESSOR THEORY 3 credits
This course covers microprocessor hardware and software, and the theoretical and practical aspects of interface design. The processor, memory, and input/output devices are covered. Architectural features of current microprocessors and microcontrollers (Pentium to 8088, 68040 to 68000) and microcontrollers (68HC11, 8051, 8052) are examined. Peripheral circuitry, peripheral programming techniques, and special purpose peripheral ICs are covered, as well as memory types, decoder circuits, and memory hierarchy. Honors component available.

CSET-440 — MICROPROCESSOR INTERFACING 4 credits
This course deals with the hardware necessary to build microprocessor-based systems from basic building block components. Both theoretical and practical aspects of interfacing processor, memory, and input/output devices are discussed Topics include grounding, shielding and system construction, interrupt circuitry, memory interfacing, direct memory access, bus systems, and interface components. The laboratory por-

tion of the course will allow the student to gain practical hands-on experience with the programming, interfacing and application of the microprocessor/microcomputer to real world systems. A three-hour lab is required with this course. PREREQUISITE: Senior standing in CSET or permission of instructor.

CSET-441 — EMBEDDED CONTROLLERS 3 credits
This course covers the basics necessary to develop microprocessor-based embedded systems. Embedded systems range from small microcontrollers to arrays of processors. Students study configurations, connectors, signal levels, and device addresses, as well as basic communication, file and data transfer programs, ROM programming, modem basics and BIOS programming. An overview of common microprocessor and microcontroller architecture is included. PREREQUISITE: CSET-360.

CSET-445 — OPERATING SYSTEMS 2 4 credits
This course will show the student how to plan the network infrastructure around features supported by Windows 2000, Novell Netware, and Linux/UNIX. Issues such as network protocols and services are compared based on the requirements of the company or organization. In addition, the importance of the Transmission Control Protocol/ Internet Protocol (TCP/IP) for enterprise networks is emphasized. This includes using Domain Name System (DNS), Windows Internet Name Service (WINS), NAT, Certificate Services, and Dynamic Host Configuration Protocol (DHCP.) The student will also learn how to configure, manage, secure, and troubleshoot features and services for operating systems, including routing and remote access. A three-hour lab component is included to give hands-on experience with these topics. Three hours lecture. PREREQUISITE: senior standing in CSET or permission of instructor, CSET-345; COREQUISITE: CSET-445L.

CSET-451 — COMPUTER PERIPHERALS 3 credits
Computer peripherals are studied in this course. Coverage includes magnetic and optical storage devices, ESDI and SCSI interfaces, hierarchical storage controllers, input/output devices such as printers and video displays, and computer integration topics using the PC, PC-AT and PS/2s as guides. PREREQUISITE: Senior standing in CSET or permission of instructor.

CSET-452 - COMPUTER SYSTEMS 4 credits
This course covers the advanced hardware and software issues concerning current PC systems. Topics include: video displays and drivers, bus systems, memory systems, BIOS upgrades, RS-232, SCSI, USB, IEEE-1394, I/O devices, magnetic and opical storage devices, modems and systems integration. Discussions will also include emerging technologies in the PC field. The lab portion of the couse will allow students to verify the concepts introduced in class. Four hours lecture. PREREQUISITES: senior standing in CSET or permission of instructor, CSET-210 and CSET 345; COREQUISITE: CSET-452L.

CSET-460 — ADVANCED COMPUTER NETWORKING 4 credits
This course continues the concepts of computer networking and concentrates on enhancing the material learned in CSET-360. Advanced network topics including asynchronous and synchronous data communications, multiplexing, switching, advanced fiber networks, the Public Switched Telephone Network (PSTN), and Integrated Services Data Networks (ISDN) will be covered. Students will learn to inter-network different networks using sub-networks, bridging, and routing. System upgrades, management, enhancement, troubleshooting, and integration will be stressed using modern hardware and popular networking operating systems such as UNIX, Windows NT Server, and NetWare. In the lab, students will continue to construct and work with various network configurations as real-world situations and problems are presented and solved. PREREQUISITE: CSET-360

Cosmetology

COSM-120 — COSMETOLOGY SKILLS 1 2 credits
The student learns the theory of shampoo, decontamination, infection control and safety, scalp/hair disorders/diseases, hairstyling, the chemistry of shampoo and permanent wave, hairstyling for student competition, communication and computer skills. Professional image and portfolio preparation are integrated. Two hours lecture. PREREQUISITES: Placement at DRDG-092 or higher. CO-REQUISITES: BIOL-146, COSM-121, COSM-122, COSM-123.

COSM-121 — COSMETOLOGY LAB 1 6 credits
The student learns the techniques and procedures of haircutting, permanent waving, scalp treatments, shampooing, finger waving, pin curling, hair pressing, hairstyling, blow drying, thermal ironing, and an introduction to hairstyling for competition. Mannequin heads are used for practice under the supervision of a licensed instructor. Occupational safety and sanitation during each procedure are integrated and practiced. After meeting all requirements, the student will perform these skills in the STCC Cosmetology Client Lab. Twenty-five hours clinical. PREREQUISITE: Placement at DRDG-092 or hgher. CO-REQUISITES: BIOL-146, COSM-120, COSM-122, COSM-123.

COSM-122 — AESTHETICS 1 2 credits
This course is designed to develop knowledge of the basic techniques utilized in the performance of manicures and facials. Theory of massage, skin care, nail disorders/diseases, infection control, and safety are studied. Professional image, portfolio presentation, effective communication, and computer skills are incorporated. Two hours lecture. PREREQUISITE: Placement at DRDG-092 or higher. CO-REQUISITES: BIOL-146, COSM-120, COSM-121, COSM-123.

COSM-123 — AESTHETICS LAB 1 2 credits
Students will learn the skills necessary for facials, manicures, and application of nail mend. Artificial nails and nail art are introduced. Occupational safety, including infection control requirements inherent in each procedure, is practiced. After meeting requirements, students will perform these skills in the STCC Cosmetology Client Lab under the supervision of a licensed instructor. Professional image, communication, and computer skills are also incorporated. Four hours laboratory. PREREQUISITE: Placement at DRDG-092 or higher. CO-REQUISITES: BIOL-146, COSM-120, COSM-121, COSM-122.

COSM-220 — COSMETOLOGY SKILLS 2 2 credits
This course is a continuation of COSM-120. Theoretical concepts of hair color, chemical relaxing, hair pressing, artificial hair, and soft curl perms are studied. Disinfection and safety concepts are integrated. Electricity and light therapy, portfolio preparation, and communication skills are integrated as part of this course. Two hours lecture. PREREQUISITES: BIOL-146, COSM-120, COSM-121, COSM-122, COSM-123. CO-REQUISITES: SMBE-125, COSM-221, COSM-222, COSM-223.

COSM-221 — COSMETOLOGY LAB 2 6 credits
This course is a continuation of Cosmetology Skills Lab 1. Hair coloring procedures and skills such as highlighting, dimensional re-touch/glaze, chemical relaxing, soft curl perms, advanced haircutting, and permanent techniques and procedures are studied in depth and practiced on mannequins. After meeting these requirements, students complete the competency requirements for each procedure in the STCC Client Lab. A portfolio of the student's accomplishments is required. Professional image communi-

cation skills, computer skills, and safety and infection control are integrated. Twenty-five hours clinical. PREREQUISITES: BIOL-146, COSM-120, COSM-121, COSM-122, COSM-123. CO-REQUISITES: SMBE-125, COSM-220, COSM-222, COSM-223.

COSM-222 — AESTHETICS 2 2 credits
The student will learn the theoretical components of superfluous hair removal and makeup. Resume and portfolio preparation are incorporated. Infection contol and the safety practices inherent in each component are studied. CD-ROMs reinforce the recommended concepts and methodologies which students learn in the program. A computerized test environment is implemented as licensure is prepared for. Two hours lecture. PREREQUISITES: BIOL-146, COSM-120, COSM-121, COSM-122, COSM-123. CO-REQUISITES: SMBE-125, COSM-220, COSM-221, COSM-223.

COSM-223 — AESTHETICS LAB 2 2 credits
As a continuation of Aesthetics Lab 1, basic procedures for makeup and superfluous hair removal are practiced. Manicures and facials are part of this course and must be practiced in the STCC Client Lab inorder to meet the competency requirement. Communication, professional image, infection control, and the safety practices inherent in each procedure are performed by the student as part of each competency. Four hours laboratory. Equivalent to COSM-216, COSM-214. PREREQUISITES: BIOL-146, COSM-120, COSM-121, COSM-122, COSM-123. CO-REQUISITES: SMBE-125, COSM-220, COSM-221, COSM-222.

Criminal Justice
(*See* Law Enforcement/Criminal Justice)

Dental Assistant

DAST-100 — DENTAL ASSISTING TECHNIQUES 1 3 credits
This course is primarily designed to educate the student in the proper identification, care and use of all types of dental equipment and instruments. As the student progresses, he/she will have a working knowledge of tray set-ups and instrument sequencing for each dental procedure to enable the student to utilize 4-handed chairside assisting effectively. Aseptic techniques, including an understanding of the principles of microbiology, sterilization and infection control are emphasized in this introductory course. In addition, dental terminology and charting procedures will be discussed. CO-REQUISITE: DAST-100L.

DAST-102 — ORAL ANATOMY 2 credits
Study of the anatomy, embryology and histology of oral structures with emphasis on deciduous and permanent dentitions including morphology, eruption, function and occlusions.

DAST-103 — DENTAL RADIOLOGY 1 3 credits
This course is primarily designed to afford the student an opportunity to integrate the theoretical as well as the practical application of exposing, processing, mounting and interpreting full-mouth and bite-wing radiographs through the use of the bisecting and paralleling techniques. These goals are achieved through the utilization of simulated

exercises and clinical practice which will aid the student in developing radiographic expertise. In addition, panoramic radiography will be discussed. CO-REQUISITE: DAST-103L.

DAST-105 — DENTAL SCIENCES 1 2 credits
This course is primarily designed to educate the student in all phases of diet, nutrition, and oral health. It is intended to familiarize the student with basic nutritional deficiencies and oral manifestations that the patient may experience as a result of his/her dietary habits. Also covered in the course are the principles of nutritional counseling. As the student progresses, he/she will have a working knowledge of the techniques of counseling patients according to their specific dietary and oral health needs.

DAST-106 — DENTAL MATERIALS 1 3 credits
The chemical, physical and manipulative properties of common materials are studied. Attempt is made to correlate the various materials used in dentistry to the principles and practices of major specialties in dentistry. The role of the dental auxiliary in the manipulation and application of these materials is stressed. CO-REQUISITE: DAST-106L.

DAST-200 — DENTAL ASSISTING TECHNIQUES 2 3 credits
A continuation of first semester, this course seeks to advance the skill and dexterity of the student in all techniques. There is a coordination of activities in an effort to combine efficient chairside performance with general dental assisting tasks. Additionally, this course is designed to enhance the student's awareness of various employment opportunities that will be available upon graduation. To accomplish this goal, the student will pursue an in-depth study of the numerous dental specialties, including periodontics, orthodontics, oral surgery, and endodontics, to name a few. With this knowledge, the student should be able to integrate effectively the theory of dental assisting with the practical application of all procedures. In order to educate the student as to his/her legal responsibilities to the dentist, the patient, and ultimately to the field of dental assisting, the student will also receive lectures on ethics and jurisprudence as they pertain to the practice of dentistry. PREREQUISITE: DAST-100; CO-REQUISITE: DAST-200L.

DAST-201 — DENTAL SCIENCES 2 3 credits
This course is designed to familiarize the student with the various tissue changes that may occur in the patient's oral cavity as a result of pathological and/or systemic conditions. Also included will be a study of medical emergencies and their respective first-aid treatment procedures. Specific types of pharmacological agents that are utilized in the dental office in order to alleviate pain and fear or enhance anesthesia as well as those agents which are prescribed to the patient to control systemic disease will be discussed. The student will be required to enroll in and pass a Certified Cardiopulmonary Resuscitation course which will be offered in conjunction with this area of study. PREREQUISITE: DAST-105, successful completion of fall semester courses with a "C" (73%) or better. Successful completion of a basic life support and recognition (certification) with current status in the academic year.

DAST-202 — DENTAL RECORDS 2 credits
This course is primarily designed for the dental assistant. Included will be basic business procedures which are essential to the effective management and control of the dental office. Business skills are reviewed and developed for practical application in the office. In addition, procedures in filing, banking, billing, managing the appointment book, organizing a preventive recall system, insurance, tax forms, and all types of financial transactions which might be found in the dental practice will be explored. PREREQUISITE: DAST-100.

DAST-203 — DENTAL RADIOLOGY 2 1 credit
A continuation of the first semester, this laboratory course enables the student to further enhance his/her skills in the techniques of radiographs through the utilization of the bisecting and paralleling techniques. These goals are achieved through the use of simulated exercises and clinical practice on patients which will aid the student in developing radiographic expertise within the dental office. PREREQUISITE: DAST-103. Successful completion of fall semester courses with a "C" (73%) or better. Successful completion of a basic life support and recognition (certification) with current status in the academic year.

DAST-204 — CLINICAL AFFILIATION 5 credits
Since the College does not have a dental school with which to affiliate, this portion of the student's training is accomplished through the continued interest and cooperation of our area dental society. At this time, the student should be able to expand his/her dental assisting education and to improve his/her chairside skills under the direct supervision of dentists and auxiliary personnel. PREREQUISITES: DAST-100, DAST-102, DAST-103, DAST-105, DAST-106.

Dental Hygiene

DHYG-101 — CLINICAL PRACTICE 1 4 credits
Lectures and preclinical laboratory sessions are presented to introduce the etiology and prevention of dental diseases, normal oral conditions and common deviations, theory and practice in specific clinical techniques in the practice of dental hygiene. Students must pass both laboratory and theoretical components of the course in order to continue in the program. CO-REQUISITE: DHYG-101L.

DHYG-103 — ORAL ANATOMY 1 2 credits
This course is designed to familiarize the dental hygiene student with the anatomical components and functions of the teeth and supporting structures. Soft tissue landmarks of the oral cavity, dental terminology, and occlusion will be studied.

DHYG-104 — DENTAL RADIOLOGY 3 credits
This course will explore the basics of dental radiology, including x-ray physics, characteristics of radiation, the dental x-ray machine, effects of radiation exposure, radiation protection, image receptors, processing, digital radiography, dental radiographic anatomy, and intra-oral radiographic procedures. Students will learn intra and extra-oral radiographic procedures in the laboratory. CO-REQUISITE: DHYG-104L.

DHYG-200 — NUTRITION AND ORAL HEALTH 2 credits
This introductory course is designed to familiarize the dental hygiene student with the basic concepts and principles of nutrition. Emphasis will be placed on those nutrients which will have an overall effect on the oral cavity. Disease entities which may affect the healing response of the oral environment will be covered. Counseling techniques for diet modification will be introduced. PREREQUISITE: BIOL-140.

DHYG-201 — ORAL PATHOLOGY 2 credits
Introduction to the basic principles of disease pertaining to the head and oral structures will provide the background for recognition of such diseases within the scope of the dental hygienist's practice and responsibility.

DHYG-202 — CLINICAL PRACTICE 2 5 credits
A continuation of Clinical Practice 1, this course will offer theoretical and clinical application of concepts related to dental hygiene care. Students will be introduced to the clinical phases of practice, assessment of the patient's needs, the dental hygiene diagnosis, implementation of various dental hygiene procedures, and the process of evaluating outcomes of patient treatment. Care and treatment of medically compromised patients is introduced. PREREQUISITES: DHYG-101, DHYG-103, DHYG-104; CO-REQUISITE: DHYG-202L.

DHYG-203 — ORAL ANATOMY 2 2 credits
A continuation of Oral Anatomy 1 DHYG-103 with emphasis on the embryology and histology of the maxillofacial area and dental structures. Attention will be given to skeletal structure, muscle function, blood supply, and innervation of the maxillofacial region. PREREQUISITES: DHYG-103, BIOL-132.

DHYG-300 — PERIODONTOLOGY 2 credits
This course will explore the pathogenesis, diagnosis, and treatment of periodontal disease. Emphasis will be given to the microbiological progression of periodontal disease, host response, diagnostic methods, treatment philosophies, treatment modalities, and the role of the dental hygienist in the treatment and prevention of periodontal disease. PREREQUISITE: DHYG-202.

DHYG-301 — DENTAL MATERIALS 3 credits
This course is designed to familiarize the dental hygiene student with knowledge of the various dental materials placed in and around the oral environment. Focus will be placed on the composition, chemistry, clinical properties, mixing techniques, recontouring and finishing techniques, and the advantages, disadvantages, and setting times of the more common materials utilized in the dental setting. The role of the dental auxiliary in the manipulation and application of these materials is stressed. Students must pass both the clinical and theoretical components of the course in order to continue in the program. CO-REQUISITE: DHYG-301L

DHYG-302 — PHARMACOLOGY 2 credits
Study of a variety of drug groups with special emphasis on the drugs particularly used in dentistry. Emphasis will be placed on the physical and chemical properties, modes of administration, therapeutic and adverse effects, and interaction of various drug groups. PREREQUISITE: BIOL-140

DHYG-303 — CLINICAL PRACTICE 3 6 credits
A course designed to enhance the comprehension of dental hygiene services and to apply basic sciences to the practice of dental hygiene. The students will learn to expand upon their basic skills in areas such as radiographic interpretation, recognition and charting of periodontal diseases, advanced hand instrumentation, evidence-based research, and periodontal debridement. A continuation of the care of medically-compromised patients such as those with bronchopulmonary disease, cancer, hepatitis, those who are developmentally disabled, and other special needs patients is included. Application of theoretical concepts to clinical techniques will enable the student to provide total patient care. Students must pass the clinical and theoretical components of the course in order to continue in the program.
PREREQUISITE: DHYG-202, DHYG-202L; CO-REQUISITE: DHYG-303L.

DHYG-400 — COMMUNITY DENTAL HEALTH 3 credits
An introduction to dental public health with an emphasis on dental care delivery, demographics of dental health, dental epidemiology, biostatistics, oral health education, planning and implementation of community dental programs, and research in dental

public health. Students will assess the oral health needs of a population, and will plan, implement, and evaluate a community field project at a local health or educational facility.

DHYG-401 — CLINICAL PRACTICE 4 6 credits
A course designed to provide students with the theoretical background needed to perform advanced clinical procedures, to function as a respected member of the oral health team in any dental practice setting, and to utilize higher level thinking to make decisions regarding patient care. Emphasis is placed on periodontal therapy for dental hygienists, ethics, and jurisprudence in dentistry, application for employment, appointment control and recall systems. Simulation exercises, role playing, reading and research in the field will enable the dental hygiene students to discover their personal ethics and values in dentistry, so that they will be able to handle most situations in the dental environment. Students must pass both clinical and theoretical components of the course in order to complete the Dental Hygiene curriculum. PREREQUISITE: DHYG-303; CO-REQUISITE: DHYG-401L.

DHYG-402 — APPLIED DENTAL AUXILIARY SKILLS 2 credits
This course is designed to provide the student with the requisite knowledge and practice necessary to meet Mass. certification requirements to perform local anesthesia techniques. The utilization of nitrous oxide for sedation will be addressed. In addition, students will be prepared to provide sealant treatments for caries control, tooth whitening pocedures, diagnostic tests, and to use intra-oral imaging tools. All procedures will be taught to clinical competence, with the exception of nitrous oxide sedation. CO-REQUISITE: DHYG-402L

Developmental English
(See English)

Diagnostic Medical Imaging

NUCLEAR MEDICINE

NMDT-102 — INTRODUCTION TO NMT 3 credits
This course serves to introduce the student to Nuclear Medicine Technology. The first two weeks are devoted to understanding the rationale and requirements of the program as documented in the Handbook. Other content areas to be covered are: understanding the radioactive atom and its potential decay patterns, identification and measurement of radiation, radiation protection and safety requirements, the production and implementation of radiopharmaceuticals, as well as the quality of these products. Basic chemistry will be discussed in relation to radiopharmaceutical binding. CONCURRENT: BIOL-132.

NMDT-105 — ORIENTATION TO PRACTICUM *(5 weeks)* 1 credit
This orientation class will provide the student with an understanding of the Nuclear Medicine procedures, terminology associated with the department, and a general over-

view of the field, thus allowing a smooth transition for the student into the hospital setting.

NMDT-210 — NUCLEAR IMAGING OF ORGANS 3 credits
This course initially introduces the methods of localization and biorouting of radiopharmaceuticals used in nuclear medicine technology. Upon completion of the above, the course will move into an organ/system approach detailing the following organ systems: central nervous, endocrine, respiratory, gastrointestinal, therapeutic systems and other miscellaneous systems. The coverage of each organ system will include in detail a discussion of the anatomy and physiology, radiopharmaceuticals used, technical aspects of imaging, as well as the indications and interpretations of the scans. PREREQUISITES: NMDT-102, BIOL-132.

NMDT-212 — NUCLEAR CARDIOLOGY 2 credits
An introduction to cardiac anatomy, its terminology, and the physiology of heart function is first reviewed. The heart's ability to transmit electrical activity will be evidenced by a description of the ECG in its normal and abnormal states. The factors leading to coronary disease are introduced to underline the causes of acute MIs and coronary artery insufficiency. Myocardial scans which illustrate the detection of CAD and also the measurement of cardiac function will be discussed inluding: purpose, patient preparation, radiopharmaceuticals, instrumentation, and data acquisition. Computer analysis of data both qualitative and quantitative for specific cardiac function and measurement is presented. PREREQUISITES: NMDT-102, BIOL-132; CONCURRENT: NMDT-210, BIOL-232, and NMDT-207.

NMDT-306 — STATISTICS AND INSTRUMENTATION 3 credits
The course comprises statistical analysis and current nuclear medicine instrumentation. The student will learn: experimental design, its terms, and methods of statistical evaluation to be applied to nuclear medicine research and clnical studies. This will aid the student in developing a scientific paper required concurrently in the Practicum 3 course. All current nuclear medicine instrumentation will be discussed with regard to design and function, characteristics of use, and their quality control procedures. SPECT technology and quality control will also be highlighted. PREREQUISITES: NMDT-210, NMDT-212; CONCURRENT: PHYS-300.

NMDT-415 — INDEPENDENT STUDY 0 credit
This is a course of directed review and study for the student who has completed all the course requirements in Diagnostic Medical Imaging - Nuclear Medicine but who has failed to pass the simulated registry examination as required for graduation. Successful completion of this course with a passing grade on a comprehensive examination will enable such a student to graduate.

NMDT-417 — SPECIAL PROCEDURES IN NUCLEAR MEDICINE *(10 weeks)*
2 credits
This course reflects new trends in nuclear medicine imaging and laboratory procedures, as expected by the accrediting agency and certification boards. Content to be included in this course is initially related to immunology and the use of radiolabeled antibodies in diagnostic imaging and therapy. It will also highly demonstrate emerging PET technology with emphasis on instrumentation and clinical scans. The growth of other tumor-seeking radiopharmaceuticals will be discussed. Additional radioactive lab procedures related to hematology disorders will be described. Procedures such as Schilling's testing, and blood volume dilution studies: red cell mass/volume, survival and sequestration, will be illustrated. This course will reflect new and existing diagnostic testing in nuclear medicine. PREREQUISITES: NMDT-210, NMDT-212, NMDT-306.

PRACTICUM EXPERIENCE

Practicum includes the clinical experiences unifying the theory taught in the Nuclear Medicine and support courses. The sequencing of the practicum and competency examinations in specific task areas places gradual expectations on the level of the student so that after over 1900 accumulated clinical hours in twenty-four months, the student can be graduated as a competent NMT, board eligible. The expectations and requirements are outlined in the student handbook as well as in each course syllabus.

NMDT-103 — PRACTICUM 1 *(10 weeks)* 2 credits
The student is expected to apply classroom knowledge within the clinical setting, demonstrating initiative and enthusiasm to the supervising technologist. The semester competency examinations indicate the ability of the student to integrate theory and clinical practice. Offered two eight-hour days per week for a total of 144 clinical hours. CONCURRENT: BIOL-132, NMDT-102.

NMDT-207 — PRACTICUM 2 2 credits
This is the second course in the sequence of clinical practicum. Additional competency examinations are required. Offered two eight-hour days per week for a total of 224 clinical hours. PREREQUISITES: NMDT-102, NMDT-103, BIOL-132.

NMDT-209 — PRACTICUM-SUMMER-1 *(10 weeks)* 5 credits
This is the third in the sequence of clinical practica. Weekly classes are scheduled for the purpose of clinical discussion and review. A comprehensive examination is required, and will cover the topics included in the first year of study. Grading for the summer session will reflect both the clinical and the comprehensive components of the course. Offered 40 hours per week for a total of 400 clinical hours. PREREQUISITES: NMDT-207, BIOL-232; CO-REQUISITE: NMDT-209L.

NMDT-301 — PRACTICUM 3 5 credits
This is the fourth course in the sequence of clinical experience. Additional competency examinations will be assigned. Offered three eight-hour days per week for a total of 328 clinical hours. PREREQUISITES: NMDT-209, concurrent NMDT-306, PHYS-300, MAST-207.

NMDT-401 — PRACTICUM 4 5 credits
This is the fifth course in the sequence of clinical experience. Additional competency examinations will be assigned. Offered three eight-hour days per week for a total of 328 clinical hours. PREREQUISITES: NMDT-301, NMDT-209, PHYS-300.

NMDT-410 — PRACTICUM-SUMMER-2 *(10 weeks)* 5 credits
This is the *final* practicum course, which involves the integration of two years of classroom learning with clinical practice. The student will be individually supervised with the preparation and injection of radiopharmaceuticals, as each affiliate permits. Unassisted performance of routine clinical exams, processing and analysis of non-imaging data, and maintaining a room work schedule will be further developed. Upon completion of this course, the student will have achieved all levels of competencies necessary for employment in nuclear medicine.
Weekly classes are scheduled for the purpose of clinical discussion and review. A comprehensive simulated registry exam is required. Grading for the summer session will reflect both the clinical and didactic components of the course. Successful completion of this course demonstrates all requirements of the JRC to sit for a national certifying exam and seek employment in nuclear medicine. Offered 40 hours per week for a total of 400 contact hours. An 11th week is included for the completion of all clinical make-up hours. PREREQUISITES: NMDT-401, NMDT-417; CO-REQUISITE: 410L.

Diagnostic Medical Imaging

RADIOGRAPHY

RADG-111 — RADIOGRAPHIC POSITIONING 1 4 credits
This course provides the basis for performing anatomic positioning. Anatomic positioning is the "art" of radiography. The final product, the radiograph, is dependent upon proper anatomic positioning, as well as the proper technical factors. The ultimate purpose of all positioning is to visualize specific parts of the body, free from superimposition of anatomic structures and pathology. This course will include development of psychomotor skills in the application of ionizing radiation to produce diagnostic radiographs of the appendicular skeleton. The laboratory section of this course affords time for the student to demonstrate and practice the radiographic positions. The lab sessions simulate conditions or situations with patients in the radiology department. PREREQUISITE: ALGB-093 or equivalent. Concurrent: RADG-111L.

RADG-112 — IMAGE PRODUCTION AND EVALUATION 2 credits
An understanding of how images in radiography are recorded is necessary as a first step in obtaining the best radiograph for medical diagnosis. This introductory course covers these essentials: film, video, laser and computer images, manual and automatic processing, intensifying screens, primary exposure factors, and mathematical principles that apply to image quality. These topics include grids, beam restricting decices, density contrast, detail, geometric and other types of distortion, and ways to reduce radiation dose to the patient. CONCURRENT: RADG-112L; PREREQUISITE: ALGB-093 or equivalent.

RADG-116 — INTRODUCTION TO CLINICAL PRACTICE *(10 weeks)* 2 credits
This introductory course will deal with the essentials for patient/technologist interaction. The relationship between clinical education and the theory component of the R.T. curriculum as well as defining the clinical competency evaluation system are covered. Students will learn definition of terms, titles of organizations, and abbreviation/phrases used in a radiography department. They will also discuss personal obligations, what is meant by professional confidentiality, and effective communication techniques. The nature of ionizing radiation and its biological effect on the human, risk versus benefit, radiation detection equipment, and instrumentation. The class will also discuss the NCR and Commonwealth of Massachusetts rules and regulations relating to protection and monitoring of personnel. PREREQUISITE: high school algebra 2.

RADG-211 — RADIOGRAPHIC POSITIONING 2 4 credits
This course is a continuation of RADG-111, Positioning 1. It deals with the anatomic positioning of the spine and ribs, and pathology. Also, assisting the Radiologist in contrast instillation during exams of the urinary system, gastrointestinal, and bilary tracts. The lab section of this course affords time for the student to demonstrate and practice the radiographic positions. The lab sessions simulate conditions or situations with patients in the radiology department. PREREQUISITES: RADG-111, RADG-112, BIOL-132. Concurrent: RADG-211L

RADG-212 — EQUIPMENT OPERATION AND MAINTENANCE 2 credits
Sequential to RADG-112, an in-depth examination of the equipment used in radiography, starting with the x-ray tube and the rectifying circuit, tube ratings, and the cooling charts for multiple exposures, automatic exposure control, image intensification, stereography, and tomography. Problem solving for different grids is covered. PREREQUISITE: RADG-112: CONCURRENT: RADG-212L.

RADG-213, 214, 313, 415, 416 — CLINICAL PRACTICUM 1, 2, 3, 4, AND 5 2, 5, 3, 3, 5 credits
These courses provide a structured clinical experience to assist the student in the application of didactic and laboratory practice in clinical settings, under the supervision of registered technologists. This experience includes an examination of the student's competence, and a continuing evaluation of his professionalism. Clinical Orientation 1 and 2 are required prior to Clinical Practicum 1 and 4, respectively. Successful completion of each course is required to progress to the next practicum. NOTE: Clinical orientation is offered during the Winter Intersession only.

RADG-311 — SPECIAL PROCEDURES IN RADIOPHARMACEUTICALS 2 credits
A highly-trained team of professionals is necessary to successfully execute the techniques required to obtain diagnostic information during a special procedure. Special procedures are commonly employed to visualize the vascular system or similar hollow organs or vessels. This course will deal with the procedures, the equipment utilized, and the preparation and performance of the procedures. PREREQUISITES: BIOL-232, RADG-111, RADG-211.

RADG-314 — RADIOGRAPHIC POSITIONING 3 3 credits
This course is a continuation of RADG-211, Positioning 2. It deals with the positioning of the cranium and special views (projections) of the anatomic structures in RADG-111 and RADG-211. The major emphasis will be placed on the various positions of the cranium and pathology. PREREQUISITES: RADG-211, BIOL-232; CONCURRENT: RADG-314L.

RADG-413 — SEMINAR/QUALITY CONTROL 3 credits
This course will provide the procedures followed in a quality control program, and will examine the benefits of such a program to the radiology department. Also, a review of the entire curriculum of the program, including film critique, will be provided. PREREQUISITES: RADG-311, and RADG-314.

RADG-418 — RADIATION PROTECTION AND BIOLOGY *(7 weeks)* 2 credits
This module is a continuation of RADG-116. Topics covered include ionizing radiation and x-ray energies. Interactions of radiation with matter and a review of the radiation units of measurement are studied. Dosimetry will cover NRC and NCRP requirements on effective dose equivalent limits, record keeping, monitoring, patient protection, and shielding requirements. Also, an introduction of the state regulation CMR 105 will be given and compared with the federal regulation. Includes a detailed examination of the effects of radiation on the cell, the systems, and the human being, including both long-term and short-term effects, somatic and genetic effects. PREREQUISITES: RADG-116, BIOL-132, BIOL-232, PHYS-300.

Diagnostic Medical Imaging

SONOGRAPHY

DMDS-100 — SONOGRAPHIC PHYSICS AND INSTRUMENTATION 1 3 credits
Presents theoretical and practical aspects of ultrasound physics and instrumentation, including characteristics and properties of sound energy and the manner in which ultrasound is used in imaging. The physical principles examined will include wave forms, propagation, velocity, wave length, acoustic impedance, reflection, refraction, other types of interaction with tissue, and imaging systems. Considered as a pivotal

course in which the student learns to integrate knowledge of physics with instrumentation theory and applications. Understanding the production and actual creation of high quality diagnostic images will be stressed. PREREQUISITE: Acceptance into DMDS; CO-REQUISITE: A college-level math course of 3 credits or more, DMDS-100L

DMDS-200 — SONOGRAPHIC PHYSICS AND INSTRUMENTATION 2 3 credits
A continuation of DMDS-100 presenting theoretical and practical aspects of ultrasound physics and instrumentation, including advanced signal processing, complex instrumentation, recording devices, biologic effects, basic hemodynamics, basic doppler principles, and quality control methods. PREREQUISITE: DMDS-100; CO-REQUISITE: DMDS-200L

DMDS-202 — SONOGRAPHIC PROCEDURES 1 (8 weeks) 2 credits
An introduction to sonographic imaging in abdominal and ob/gyn specialties. Emphasis will be placed on developing a strategy of examination based on recognition of normal and pathologic states, data from other imaging modalities, laboratory findings, patient history, and other information as appropriate. PREREQUISITE: DMDS-200.

DMDS-203 — CLINICAL PRACTICUM 1 (8 weeks) 2 credits
A clinical practicum designed to orient the student to common procedures in sonography, and to overall operation, policies, and basic patient care in the medical setting. PREREQUISITE: MAST-211; CONCURRENT: DMDS-202.

DMDS-300 — SONOGRAPHIC PROCEDURES 2 3 credits
A continuation of DMDS-202 Sonographic Procedures 1. PREREQUISITE: DMDS-202; CONCURRENT: DMDS-301.

DMDS-301 — CLINICAL PRACTICUM 2 3 credits
Application of classroom and laboratory study to sonographic examination in the specialties of abdomen and ob/gyn. PREREQUISITE: DMDS-203; CONCURRENT: DMDS-300.

DMDS-310 — SEMINARS IN MEDICAL IMAGING 3 credits
This course explores the multidisciplinary approach to modern medical imaging. Students will research, present, and discuss case studies from a point of view that emphasizes the findings from all of the imaging modalities that may be brought to bear on a particular diagnostic problem or symptom set. Relevant laboratory findings will also be discussed. Guest speakers from the local medical imaging community will be heard. PREREQUISITE: Any student in a Diagnostic Medical Imaging program currently taking a clinical practicum course. Required for DMDS students.

DMDS-400 — SONOGRAPHIC PROCEDURES 3 3 credits
A continuation of DMDS-300 Sonographic Procedures 2 study of sonography imaging in abdominal and OB/GYN specialities, with the addition of exposure to general vascular examination. Emphasis will be placed on developing a strategy of examination based on recognition of normal and pathological states, data from other imaging modalities, laboratory findings, patient history and other information as appropriate. PREREQUISITE: DMDS-300; CONCURRENT: DMDS-401.

DMDS-401 — CLINICAL PRACTICUM 3 3 credits
Application of classroom and laboratory study to examination in the specialties of abdomen, and OB/GYN. PREREQUISITE: DMDS-301; CONCURRENT: DMDS-400.

DMDS-402 — SONOGRAPHIC PROCEDURES 4 (8 weeks) 2 credits
A comprehensive review of the specialties of abdomen and OB/GYN. PREREQUISITE: DMDS-400; CONCURRENT: DMDS-403.

DMDS-403 — CLINICAL PRACTICUM 4 (8 weeks) 2 credits
A comprehensive experience requiring application of all prior theoretical and practical knowledge/skills to the clinical setting. PREREQUISITE: DMDS-401; CONCURRENT: DMDS-402.

Digital Media Production

TPRD-100 — INTRODUCTION TO MULTIMEDIA 3 credits
In this course, students will develop a personal definition of multimedia and multimedia quality, and understand a typology of multimedia applications derived from direct experience with existing multimedia materials. In addition, the students will develop an awareness of issues in the creation and delivery of multimedia products, and the role of the multimedia technologist in multimedia-using or -producing organizations. Finally, the course will outline future trends and opportunities in the multimedia technologies. PREREQUISITE: None

TPRD-112 — WRITING FOR ELECTRONIC MEDIA 3 credits
Students develop a working foundation in writing for all aspects of electronic media, including television, radio, and computer-based multimedia formats. Students are taught writing skills as they relate to news, drama, advertising, and public relations, as well as narrative styles for documentary production. This class will explore how writing for broadcast and multimedia applications differs from compositional writing. Also, the class will cover the ethics and responsibilities involved in writing for a wide, potentially global audience. PREREQUISITE OR COREQUISITE: ENGL-100.

TPRD-125 — INTRODUCTION TO VIDEO PRODUCTION 4 credits
The purpose of this course is to a) teach students the basic operations of a television studio; b) expose students to the basics of television production in the field; and c) introduce students to digital video editing. Through lecture and lab the course will allow students to learn and experiment in basic television production and direction, from the concept of an idea to its production in the studio, and finishing with an edited product. This course will also begin the process of teaching students how to work cooperatively in a group setting. The objective is to give individual students the opportunity to learn all of the aspects of broadcast production at an introductory level. These goals will be accomplished through small group lab projects. Lab required.

TPRD-140 — INTRODUCTION TO MASS COMMUNICATION 3 credits
This course familiarizes the student with the definitions of communication, the important role of the mass media in shaping our culture as well as the sophisticated mass media communications vehicles. The wide spectrum of communications — from the evolution of various media, to the impact on today's society, is explored. This includes programming philosophies/practices, image shaping, the First Amendment, information gathering, the world view of citizens, and what influence the media has on politics or politics on the media.

TPRD-200 — INTERNET MULTIMEDIA 3 credits
Software tools and technical strategies for making web pages fully functional in terms of image quality, response to users, flexibility of revision, and hypertext linking to other related sites. Issues of file compatibility, compression, graphics processing, and speed optimization are covered, with emphasis on software tools such as Dreamweaver and Flash.

TPRD-210 — ADVANCED TELEVISION WRITING 3 credits
Having mastered the basics in the introductory course, this course focuses on script writing for production including news, public affairs, and corporate programming. Students will also research, write, and produce a short documentary. As with the prerequisite, writing comprises most of this course. PREREQUISITE: TPRD-112.

TPRD-220 — DIGITAL FILM MAKING 3 credits
Develops skills used in producing and directing dramatic scenes, which are increasingly used by institutions and corporations for training and motivational purposes. Classes concentrate on the standard devices and production procedures used in staging, taping, and editing dramatic scenes containing rehearsed dialog, editorially constructed action, closeups, and reaction shots. In the studio portion of the class, student crews are assigned scenes to stage and shoot which include fictitious dialog and action details. Emphasized are the classic methods of staging and shooting overlapping camera coverage to provide material needed later in the editing process. PREREQUISITE: TPRD-310.

TPRD-230 — SPEAKING ON TV 3 credits
This class is similar to a speech class, but emphasizes the techniques needed to speak effectively and communicate to an audience through the camera. Proper professional on-camera behavior will also be covered. The student is introduced to various speaking styles and techniques, and then practices those techniques in taped studio settings. The students will perform the written material completed in TPRD-112 in this course. Formats such as individual editorial, commercial, corporate, and host/interview will be covered. The students will also act as a production crew for each other, so stated prerequisites must be completed. PREREQUISITE: TPRD-125; CO-REQUISITE: TPRD-112.

TPRD-240 — FILM STRUCTURE AND ANALYSIS 3 credits
A dynamic overview of narrative film structure that includes analyses of how movies express their meanings and how viewers interpret them. Topics include cinematography, production design, mise-en-scene, editing technique, sound design, and introductory film theory. Lectures include viewing films from a variety of genres, followed by discussion and writing assignments. PREREQUISITES: TPRD-140, ENGL-100, which can be concurrent.

TPRD-310 — ADVANCED VIDEO PRODUCTION 3 credits
This course is designed to help students become proficient in the craft of digital videography. Students will learn how to use a professional EFP camera and work on advanced shot composition. Students will also explore a range of lighting techniques for both field and indoor studio-based shooting. Topics will include depth of field, shot composition, iris settings, white and black balance, using filters, warm/cold-sharp/soft saturation/de-saturation set-up, skin control detail, and lighting tools and styles. Students will take part in shooting a video production and finishing it in post-production at the Final Cut Pro digital editing stations. Honors technical seminar available. PREREQUISITE: TPRD-125.

TPRD-322 — TELEVISION JOURNALISM 3 credits
Broadcast writing proficiency, production, and reporting are stressed, along with an examination of what news is, and what determination is made for story coverage. Through this course, students learn to compile information and collate, unearth evidence and appraise it, budget their time and energy, and develop an appreciation for accuracy. Students will also develop the ability through a hands-on approach, to produce a full news program. PREREQUISITES: TPRD-112, TPRD-210, TPRD-230,

TPRD-331 — TV PRODUCTION PRACTICUM 2 credits
Designed to provide students an exposure to professional settings, this course is taken on-site at a local cable, broadcast, medical, educational, or industrial video production facility. Activities will be determined by the on-site supervisor according to the current needs of the practicum institution. The equivalent of 6 hours per week of the semester is served on a schedule agreed to by the student and the site supervisor.

TPRD-350 — ADVANCED DIGITAL VIDEO EDITING 3 credits
This advanced video editing course uses Apple Final Cut Pro digital editing systems to cover the principles of continuity editing and special effects through compositing and animation. In learning these concepts, the following tools will be utilized: slide, roll, slip, razor, trim window, log and batch capture utility, along with the composite window and key frames. The software Boris FX and LiveType will also be covered. PREREQUISITE: TPRD-125 for TPRD majors. TPRD-352 for GRPH majors.

TPRD-351 — VISUAL QUALITY AND AESTHETICS 3 credits
This course offers an in-depth survey into the nature of visual aesthetics and visual quality evaluation systems for computer-synthesized images. We will take a close look at the visual scientific profiles that make images work both aesthetically and expressively, such as composition, lighting, tonal range, and color. We will also study the various empirical systems of measuring the quality of our visual images. Systems of image resolution, brightness range, density, and color specification will be discussed. A major concern of this course will be the conversion of original images into functional images for specific multimedia application. Through the combination of theoretical lecture and practical laboratory application, the student will learn to critically evaluate visual material for multimedia production. PREREQUISITES: ARTS-146, PHYS-256

TPRD-352 — DIGITAL SOUND AND VIDEO DESIGN 3 credits
Using software which performs the functions of a traditional professional sound studio, the course details methods for recording, mixing, shaping, creating, and otherwise composing sound flows for multimedia, motion pictures, and video. Topics include: limiters, companders, filters, flangers, time displacement, overlays, defect removal, frequency modifications, natural sources, and synthetic sources. Skills in these areas are applied aesthetically to communication projects done by students in the multimedia computer lab. Software includes After Effects, Logic Pro.

TPRD-422 — TELEVISION NEWS PRODUCTION 3 credits
Through a combination of classroom/studio laboratory time, students receive more hands-on advanced editorial techniques, further development of news production, and news informational programming. This course primarily focuses on combining the skills students have learned while in this department. Ths class is responsible for producing a live, closed circuit weekly newscast on the campus cable news network. PREREQUISITE: TPRD-322.

TPRD-440 — DIGITAL VIDEO PORTFOLIO 3 credits
This course is designed to teach students how to create a professional video portfolio using the latest digital media tools. Video streaming over the Internet will be demonstrated. Students will create a basic website that details a resume and links to selected compressed videos from previous semesters' projects. The second half of the semester will be spent learning the complexities of DVD production, including MPEG video compression, menu creation, and effective design techniques. Students will author a simple DVD highlighting their work. PREREQUISITE: 4th semester TPRD students, or permission of instructor.

TPRD-451—INTERACTIVE MULTIMEDIA DESIGN 3 credits
Students will develop skills, strategies, and techniques for the design of linear and nonlinear multimedia projects including interactive presentation, interactive video, and hypermedia including World Wide Web. Students will complete projects in which they address issues on project planning and implementation, media integration, repurposing of existing content, copyright, and human/computer interface design. Software includes Macromedia Director. PREREQUISITES: TPRD-100, ARTS-146

TPRD-452 — MULTIMEDIA INTERACTIVE AUTHORING 3 credits
Students will receive a hands-on introduction to the various metaphors of interactive multimedia authoring applications, and will complete individual and group projects including linear presentations, multimedia catalogs, and interactive video products. The projects will focus on application of multimedia to the areas of entertainment, education and training, and sales and marketing. Software includes Macromedia Flash. PREREQUISITES: TPRD-100, CMPA-103 or equivalent

TPRD-453 — DIGITAL ANIMATION 3 credits
Covers the computer tools and artistic methods used to create animation in the digital realm. Major topics are wire-frame model building, spline and polygonal methods for organic shapes, 3-D perspective, texture mapping, virtual lens and key frame for automatic in-betweening, QuickTime motion files, synchronizing motion to sounds, and final rendering of finished animations. PREREQUISITES: TPRD-100, ARTS-146, CMPA-103 or equivalent.

Early Childhood Education

CHLD-140 — SCHOOL-AGE CARE AND THE NSACA 3 credits
This course presents relevant information pertaining to the need for school-age care and the variety of programming approaches that are available to children and their families to accommodate schedules and lifestyles. The National School-Age Care Alliance (NSACA) standards for quality care and NSACA accreditation are addressed specifically within the context of programming topics. Topics covered in this course include the need for developing relationships with home, school, and whole families; understanding the developmental needs of the school-age child; understanding the significant differences between day care and school-age care; and designing programs that accommodate different needs. This course also addresses the important topics of developing respectful, safe environments and activities that acknowledge preferences and independence in school-age children. Each topic is presented in the context of developmentally-appropriate practice. Three hours lecture.

CHLD-251 —INVITING YOUNG CHILDREN INTO THE WORLD OF BOOKS 4 credits
Literature genres that are appropriate for young children will be the focus of this course. Students will investigate picture books, non-fiction books, poetry, and folktales. In addition, they will explore teaching methods that encourage response to books. Author studies will be conducted, and illustrators and their techniques examined. A particular focus of this course will be using literature to promote understanding and respect for other cultures. Four hours lecture. PREREQUISITES: ENGL-100, CHLD-100, CHLD-110.

CHLD-340 — STRATEGIES FOR COMMUNICATING WITH FAMILIES 3 credits
This course addresses elements of effective adult communication within the context of early education programs. Reading, writing, speaking and listening are critical and mutually dependent skills that are essential for developing positive and appropriate professional relationships with families and other professionals. Topics covered include verbal and non-verbal strategies for communicating with families and early childhood professionals and agencies for a variety of purposes. This course encourages students to develop communication habits that will enhance instruction and programming, while affirming and engaging families by using culturally competent and professionally-presented communication. Three hours lecture. PREREQUISITES: ENGL-100, CHLD-100, CHLD-110, CHLD-200, CHLD-300

Economics

(*See* Social Sciences)

Electrical Engineering Technology

ELEC-110 — BASIC ELECTRICITY 1 3 credits
Basic Electricity 1 is the first electrical course students will take in the Electrical Engineering Technology program at STCC. The purpose of the course is to give students a firm foundation in electrical theory. The course covers DC circuit theory with an emphasis on circuit analysis, practical application, and troubleshooting. The thorough presentation and use of laboratory test equipment throughout the course enhances the student's understanding of electricity. PREREQUISITES: High school algebra 1 & 2, and placement in MATH-132.

ELEC-121 — CAD FOR AUTOMATION 3 credits
Computer Assisted Drafting (CAD) for Automation is directed toward the drafting of industrial electronic circuits, robotic work cells, and flow lines. The student will learn basic CAD skills on the IBM PC and apply these skills to the creation of electronic circuits and automated systems. The proper arrangement of associated equipment, robots, conveyors, and vision systems is fundamental to the trends in industry. This course is also a foundation for other courses in this program.

ELEC-140 — BASIC PROGRAMMING FOR MICROCOMPUTERS 3 credits
This is an introductory course requiring no previous knowledge of microcomputers. The course contains two distinct topics: microcomputer fundamentals, and BASIC programming. Microcomputer fundamentals include what is a computer system, its operation, and applications such as word processing. The operation of DOS and Windows are also addressed. The programming section will utilize QBASIC and provide applications that will enhance the student's ability to master other programming languages and the related field. This course builds the skills necessary for greater success in subsequent courses.

ELEC-210 — BASIC ELECTRICITY 2 3 credits
The continual expansion of knowledge opens new doors to employment opportunities. There is rapid change in the field of electricity. Behind all this change lies the basic core of electrical knowledge that a student must master. Basic Electricity 2 provides this basic framework with an introduction to alternating current and its comparison with direct current. The course covers AC circuit theory, AC circuit analysis, practical application, and troubleshooting. The lab associated with the course is intended to reinforce classroom theory. PREREQUISITES: ELEC-110, MATH-132.

ELEC-241 — FUNDAMENTALS OF MOTOR CONTROL 3 credits
A technologist in the electrical industry may be exposed to a great deal of information. Therefore, fundamentals of motor control, relay logic, and the related electrical theory are presented in a manner that is easy to understand and applicable to on-the-job situations. The theory of control, operation, and design is presented clearly and concisely. Students learn troubleshooting techniques related to real-world situations. PREREQUISITES: ELEC-110, ELEC-140, MATH-132: CO-REQUISITE: ELEC-210

ELEC-260 — FLUID POWER TECHNOLOGY 3 credits
This course provides a fundamental understanding of the physical principles of hydraulics and pneumatics in a logical building-block manner, along with a practical working knowledge of the components normally utilized in designing, installing, operating, and maintaining hydraulic and pneumatic systems.

ELEC-320 — INDUSTRIAL ELECTRONICS 1 3 credits
Industrial electronics is changing faster than ever because of the rapid changes in the electronics field. Large discrete solid state electronic devices with an emphasis on solid-state devices as they relate to specific applications are studied. Each device will have associated with it a laboratory exercise in order to provide a better understanding of the material at hand. Some of the topics covered will include diodes, diode applications, transistor switches, field effect transistors, DC biasing, switching circuits, thyristors, and voltage regulators. PREREQUISITES: ELEC-210, ENGL-100, (and MATH-232, which may also be taken concurrently.)

ELEC-331 — CONTROL SYSTEM THEORY 1 4 credits
The goal of this course is to provide a state-of-the-art resource on control system technology. This includes the terminology, concepts, principles, procedures, and computations used by technicians to select, analyze, specify, design, troubleshoot, and maintain all established methodology with the aid of examples, calculator and control system components, Laplace transforms, instrument characteristics, signal conditions, and sensors. PREREQUISITES: ELEC-210, MATH-132, ENGL-100.

ELEC-340 — FUNDAMENTALS OF ROBOTICS 3 credits
The purpose of this course is to provide an overview of Robotic Technology. It explores the basic components of a robot system, programming techniques, safety and applications. Other topics include sensor systems, actuators, servos, control systems, and interfacing. The lab will be used to perform realtime exercises in robot operation and control. A research project will involve obtaining robot specifications and creation of a realistic robot application. PREREQUISITES: ELEC-121, ELEC-140; CO-REQUISITE: ELEC-260

ELEC-350 — PROGRAMMABLE MOTOR CONTROL 3 credits
Control systems for electric motors are vital for the proper performance and protection of modern plant equipment. The programmable logic controller or PLC replaced many of the older relaying type logic systems; for this reason, this course deals only with programming of a modern PLC. Basic relay type logic is required for this course since

the PLC will be used as a tool to simulate the older style relaying circuit. The laboratory associated with this course will be necessary for the complete understanding of programming the PLC and how a PLC interfaces with the modern industrial plant control systems. PREREQUISITE: ELEC-241.

ELEC-411 — INDUSTRIAL ELECTRONICS 2 3 credits
This course is a continuation of Industrial Electronics 1. Industrial electronics currently utilizes a variety of the components that are constantly changing and evolving. These components and their accompanying circuits will be studied in both the classroom and lab. The major topics covered include, but are not limited to, digital logic, transistors, thyristors, computer circuits (i.e., counters, registers, etc.), linear circuits, and control systems.
PREREQUISITES: ELEC-320.

ELEC-431 — CONTROL SYSTEM THEORY 2 3 credits
Control System Theory 2 is a continuation of Theory 1. The goal of the course is the same, utilizing the same teaching methodology with the addition of a laboratory period. This added lab will help amplify the concepts learned in the classroom. Some of the topics covered will include manipulation, control, analysis, and design. PREREQUISITES: ELEC-331, MATH-232, ELEC-320, ENGL-100, ELEC-480.

ELEC-441 — SENIOR PROJECTS 3 credits
This is a capstone course requiring the creation, design, and application of electromechanical systems to real world applications through the use of automation, robotics, and the latest manufacturing techniques. Assigned projects wil require related research, documentation, presentation, and teamwork. Emphasis will be on independent and interdependent group accomplishments in a cohesive process related to real-world problem solving. Notebooks, timelines, and team meetings with progress reports will be required. This course is three credits, requires senior standing in the department, and each registered student must be a candidate for spring graduation. PREREQUISITES: ELEC-210, ELEC-320, ELEC-350, ELEC-331, ELEC-480 or permission of department chair.

ELEC-451 — MICROPROCESSOR APPLICATIONS 3 credits
This course is directed to the application and use of microprocessors in industry, with emphasis on understanding basic operation, interfacing, and programming. Study includes basic architecture, developmental languages, bus structures, interfacing with peripheral devices, memory, input/output devices, and diagnostics. PREREQUISITES: MATH-232, ELEC-210, ELEC-320.

ELEC-480 — ROBOTICS AND AUTOMATED SYSTEMS 3 credits
This course integrates the use of robots with industrial electronics systems and devices and includes a research project on artificial intelligence. The student is exposed to robotic systems and practical simulated industrial applications typical in American industries. The laboratory sessions emphasize computer control, programming, expert systems, robotic work cells, machining control centers, interfacing, systems operation, and troubleshooting. PREREQUISITES: ELEC-320, ELEC-331, ELEC-340, MATH-132.

Electronic Systems Engineering Technology

ESET-100 — INTRODUCTION TO ENGINEERING TECHNOLOGIES 2 credits
This course is designed as a developmental course for students planning to enter an engineering technology career. This course will investigate all of the Engineering Technology Division program offerings at STCC. Visits to department laboratories, visits by industry professionals, as well as participation by various Division faculty will provide the basis for a sound introduction to these programs. Activities are also designed to improve student time-management, test-taking strategies, and note-taking skills, as well as to enhance self-esteem and motivation. Women are encouraged to enroll in this course for career directions in the world of technology. PREREQUISITE: None.

ESET-107 — INTRODUCTION TO TECHNOLOGY SYSTEMS 2 credits
Graduates of the electronics-based technologies programs are called upon to deal with increasingly complex, rapidly evolving, and in many cases "intelligent" technology systems. This course will introduce the student to the concept of a system. Examples of modern electronics-based and computer-controlled technology systems will be presented. These examples will explore the evolution of systems from design to production to installation and their control, updating, and maintenance. An additional course goal will be the development of general observational, analytical, and creative problem-solving skills and the necessary tools for life-long learning. The role of computers in the design, simulation, and control of technology systems will be integrated into the course through example and class projects. PREREQUISITE: None

ESET 110 — BASIC ELECTRONICS 1 3 credits
This course is an introduction to the fundamental concepts of electronics. Coverage includes concepts of electricity, series and parallel circuits, network theorems and laws, and metering principles. The purpose of this course is to present the concepts and ideas which will be needed in more advanced course work about specific electronic systems. Emphasis is placed on the analysis of direct current networks, specifically, the calculation of such circuit parameters as current, voltage and power for various network configurations. PREREQUISITES: High school Algebra 1 and 2.

ESET-111 — INTRODUCTION TO CAET (Computer-Aided Engineering Technology) 3 credits
This course provides the electronics student with an introduction to the PC/workstation environment. After a short introduction to personal computer (PC) hardware and operating systems concepts, the student gains experience with basic computer applications (i.e., word processing spreadsheets, and database management). Next, the student is introduced to electronic drafting (CAD) and documentation using modern software tools.

ESET-115 — ELECTRONICS LAB 1 2 credits
This course is the first in a sequence of four courses designed to give the student practical experience with electronic components, measuring instruments and equipment. The emphasis in the laboratory work is on the verification of theory studied in Basic Electronics 1 about direct current networks. Equal emphasis is placed on the familiarization of the student with electronic metering principles, electronic testing procedures and the use of various electronic components commonly found in the electronics industry.

ESET-140 — ELECTRICAL CIRCUITS 4 credits
This course will train students in the application of Ohm's law, Kirchoff's laws, Thevenin's and Norton's theorem, and superposition in the analysis of DC and AC passive circuits, including R-L-C circuits, impedances, phase angles, resonance, and transformers. PREREQUISITE: MATH-132.

ESET-141 — ELECTRIC CIRCUITS 4 credits
This course serves as an introduction to the theory of DC and AC electrical circuits. Students learn the fundamental concepts of voltage, current, resistance, and power and energy and the relationship between them. Methods of circuit analysis using Ohm's Law, Kirchhoff's Laws and network theorems are studied. Concepts of AC, capacitance and inductance are presented. Impedance, R-L-C circuits, impedance networks and transformers are introduced. Circuit simulation software is used to demonstrate many of the concepts introduced in the course. PREREQUISITE or CONCURRENT: MATH-132

ESET-145 — ELECTRIC CIRCUITS LAB 1 credit
This course is designed to give the student practical experience with electronic components, measuring instruments, test equipment, and modern circuit simulation software with virtual instrumentation. The emphasis in the lab work is on the verification of theory studied in Electrical Circuits. The student gains experience in constructing, simulating, and testing electrical circuits.
PREREQUISITE or CONCURRENT: ESET-141

ESET-150 — TEST AND MEASUREMENT 1 credit
This course will introduce the student to the use of traditional test and measurement equipment, PC centric virtual test equipment, and modern simulation software. Through discussion and demonstration, the student will learn the uses and limitations of various modes of system testing and evaluation. Aspects of modern data acquisition and instrument control will be introduced and demonstrated. One hour lecture.

ESET-211 — INTRODUCTION TO ELECTRONICS 3 credits
This course presents material about the theory and operation of discrete solid state devices such as diodes and transistors. Topics covered include: diodes, power supplies, GJT and FET transistors, biasing techniques and concepts of amplification. Amplifier characteristics such as frequency response, efficiency, and class of operation are also studied. The last portion of the course introduces the operational amplifier. The lab portion of the course gives the student experience with the construction, simulation, testing and troubleshooting of analog electronics systems. PREREQUISITE: ESET-141, ESET-145, ESET-111 or CMPA-103

ESET-215 — ELECTRONICS LAB 2 2 credits
A continuation of Electronics Lab 1, the emphasis in this course is again placed on practical experience. The student receives continued exposure to electronic components, test equipment and circuitry. Now the laboratory work is concerned with the verification of theory studied in the student's course work on passive networks and active solid-state devices. The student gains experience in the setting up and testing of useful electronic circuits and systems. PREREQUISITE: ESET-115 with a "C minus" or better.

ESET-220 — ACTIVE NETWORKS 1 3 credits
This course is an introduction to the theory of solid state devices. Topics include an introduction to semiconductor materials and physics, dopings, P-N junctions, various diodes and diode circuits, an introduction to bipolar transistor biasing schemes, load line analysis, A-C models and equivalent circuits, determination of voltage and current gain, input, and output resistance, and maximum signal handling capability. PREREQUISITES: MATH-103, ESET-110, ESET-115.

ESET-226 — COMPUTER APPLICATIONS 3 credits
This course will introduce the student to the use of the PC for test and measurement. Through the use of a visual programming language (HPVEE) the student will learn

how to control modern test and measurement instrumentation, perform data acquisition and analysis, and graphically display data. Students will implement lab projects which will simulate automatic test equipment (ATE) used in the manufacturing environment, virtual instrumentation, and the remote monitoring and control of a system over a computer network. PREREQUISITES: ESET-141, ESET-145, ESET-111 or CMPA-103

ESET-240 — AUTOMOTIVE ELECTRONICS 1 4 credits
This course introduces the principles of electricity and electronics. The topics include current, voltage, resistance, series and parallel circuits, magnetism, capacitance, and DC and AC current. Topics in semiconductor diodes and transistors are also introduced.

ESET-250 — LINEAR ELECTRONICS 1 4 credits
This course will train students in the physical principles underlying current carriers in semiconductor materials; static and dynamic characteristics of diodes and transistors; biasing methods and concepts of amplification; analysis of basic BJT and FET circuits; frequency response of one- and two-stage amplifiers; troubleshooting; analysis by computer simulation. PREREQUISITES: ESET-140, PROG-120.

ESET-255 — LINEAR ELECTRONICS 2 4 credits
This course is designed to train students in the analysis and application of advanced electronic circuits. Topics include differential amplifiers, stage gain in decibels, input and output impedances, linear IC operational amplifiers, frequency response and Bode plots, active filters, D/A and A/D circuits, oscillators and high frequency amplifiers, troubleshooting of test circuits, and analysis by computer simulation. PREREQUISITES: ESET-140, ESET-250.

ESET-260 — DIGITAL SYSTEMS 3 credits
This course is an introduction to digital logic and circuits. Topics include number systems, logic gates, Boolean algebra and binary codes, combinational logic circuits, flip-flops and timing circuits, counters and registers, memory devices, and programmable logic. Additionally, the characteristics of logic families such as TTL, CMOS, and ECL will be studied. PREREQUISITE: ESET-141 or permission of Instructor.

ESET-265 — DIGITAL SYSTEMS LAB 1 credit
This lab course is designed to emphasize the topics presented in the Digital Systems course. Experiments include combinational logic circuits, encoders and decoders, latches and flip-flops, binary counter circuits, shift registers, and memory circuits. Students enrolled in this course will learn the essential skills required for troubleshooting digital electronic circuits. PREREQUISITES: ESET-145 or permission of instructor, and ESET-141 concurrently.

ESET-325 — DIGITAL ELECTRONICS I 4 credits
This course will prepare students in digital electronics with topics related to number systems and codes, logic functions, and Boolean algebra. IC building blocks are used in applications ranging from logic gates to flip-flops, counters, registers, and arithmetic circuits. Algebraic reduction and mapping are used to minimize Boolean expressions and combinational logic circuits. Computer simulation of digital circuits will be used to verify actual hardware setups. PREREQUISITES: ESET-140, PROG-120.

ESET-335 — DIGITAL ELECTRONICS 2 4 credits
This course is designed to train students in the organization, architecture, and hardware aspects of digital computer systems. Topics include an introduction to microprocessors, types and characteristics of different chips, motherboards, bus structures, memory, I/O interface devices, disk drives, video displays, and printers. Serial

and parallel buses are discussed. Applications include the interfacing of peripherals, data communications between computers, and a team project. PREREQUISITE: ESET-325.

ESET-344 — COMMUNICATIONS SYSTEMS 1 4 credits
The aim of this course is to present information about the circuit processes and basic theories essential to the understanding of communications systems. Topics included in the course are noise limitations, filter theory, amplitude, frequency and single sideband modulation, radio receivers, and transmission lines. How these systems are used to transmit different information forms such as audio, video, or digital data signals is studied in detail. The laboratory portion of the course allows the student to gain practical experience with typical communications hardware and some computer applications programs pertinent to the communications field. PREREQUISITE: Senior standing in ESET or permission of the instructor.

ESET-345 — AUTOMOTIVE ELECTRONICS 2 3 credits
This course is a continuation of the electronic topics introduced in ESET-240. Beginning with a review of semiconductor principles and devices, the course thoroughly investigates digital electronics and microprocessor theory and applications, particularly as related to the modern automobile. PREREQUISITE: ESET-240.

ESET-355 — DEVICES, CIRCUITS, AND SYSTEMS 4 credits
This course deals with the practical applications of linear electronic devices and circuits as applied to the operation and control of specialized systems. Topics will include switching and high voltage power supplies, high voltage design and safety considerations, differential and instrumentation amplifiers, active filters, A/D and D/A converters, V/F and F/V converters, and other data acquisition circuits. Classroom lectures will be supplemented with lab experiments. Four hours lecture. PREREQUISITE: senior standing in ESET or LEOT, and TCOM-330; COREQUISITE: ESET-355L

ESET-360 — MOBILE/WIRELESS 4 credits
This course introduces the student to mobile and wireless networks. Introductory topics include the fundamentals of wireless communications systems, RF/wireless circuits and sub-systems, and wireless digital modulation techniques. Starting with an overview of the present wireless infrastructure and services provided by it, course emphasis shifts to cellular radio. Cellular system fundamentals will be discussed, channel utilization schemes introduced, and individual systems of the different generations covered in detail. Coverage will include: AMPS, D-AMPS, GSM, IS-136 TDMA, IS-95 CDMA, Cellular Digital Packet System, and an introduction to 3G systems. Also covered in this course will be issues of security, network management, personal communications systems, wireless LANs (IEEE802.112), and fixed wireless broadband systems. The lab portion of the course will allow the student to gain experience with wireless technology. Three hours lecture. PREREQUISITE: TCOM-210; COREQUISITE: ESET-360L

ESET-370 - DATA ACQUISITION/CONTROL 4 credits
This course deals with the practical design and use of modern data acquisition and test measurement systems. Topics will include measurement techniques, sensors, transducers, interface circuitry, ADCs and DACs, PC and microcontroller-based systems. Students will also learn to manipulate collected data using spreadsheet and database software. Classroom lectures will be supplemented with lab experiments. Four hours lecture. PREREQUISITES: ESET-145, CSET-210, ESET-260, ESET-265, TCOM-330; COREQUISITE: ESET-370L.

ESET-410 - MICROCONTROLLER/DSP THEORY 4 credits
This course covers microcontroller hardware and software, and the theoretical and practical aspects of interfacing. The subunits of the microcontroller are discussed and

their operation analyzed. Topics include: processor, memory, and input/output operation. Architectural features of a current microcontroller (68HC12) are examined. With microcontroller fundamentals covered, the course emphasis shifts to the digital signal processor (DSP). Its theory of operation, specialized instructions, and applications to telecommunications operations are presented. The laboratory portion of the course will allow the student to investigate the operation and applications of a typical microcontroller and a digital signal processor. PREREQUISITE: CSET-360.

ESET-443 — MICROPROCESSOR ARCHITECTURE & SYSTEMS 4 credits
This course presents the theory of operation, the various different architectures, and the methods of interfacing of present day microprocessors. The substitution of software for hardware in logic design, the concept of the embedded controller, and the architectural features of current microprocessors/microcomputers such as the Intel 80X86 and Motorola 680X0 series will be covered in detail. The laboratory portion of the course will allow the students to gain practical hands-on experience with the programming, interfacing, and application of the microprocessor/microcomputer to the controlling of real world systems. PREREQUISITE: Senior standing in ESET or permission of instructor.

ESET-465 — SENIOR PROJECTS IN E.S.E.T. 3 credits
This capstone course is designed to combine the concepts, theories, and practices developed throughout the course of study in the ESET program and apply them to the development of a group project. Students will be required to keep a notebook and make weekly written project progress reports and monthly oral presentations of their work. A final written report and oral presentation will be required. The lecture will deal with topics relevant to project research and presentation. The five lab hours will provide students time to develop their project. PRERQEUISITE: Student must be a candidate for graduation in May, or permission of the instructor. One hour lecture. PREREQUISITES: ESET-344, ESET-355, ESET-370. COREQUISITE: ESET-465L

ESET-470 — BROADBAND WIRELESS NETWORKS 4 credits
This course is an introduction to modern broadband wireless communication networks. Topic coverage includes an overview of present-day broadband wireline systems including the technologies of: hybrid fiber/coax, SONET, ATM, and xDSL. Emphasis of the course will be on emerging wireless broadband systems including Third Generation (3G) Mobile Systems, Satellite Personal Communications Systems (PCS), wireless LANs (WLANs) and fixed wireless broadband such as LMDS. The laboratory portion of the course will allow the student the opportunity to investigate the operation of various broadband communications systems. PREREQUISITE: ESET-360.

ESET-475 — RF/WIRELESS SYSTEMS MEASUREMENTS 3 credits
This laboratory-based course introduces the student to the theory and operation of RF test and measurement equipment used in the RF/wireless telecommunications industry for both manufacturing and field service. The classroom portion of the course relates the theory of wireless system operation to the type of measurements which are needed to verify correct performance of the system and also correct operation of the various components which make up the system. The operation of spectrum and network analyzers, power and frequency meters, and RF signal generators is examined and measurements and tests are performed on typical wireless systems and subsystems. PREREQUISITE: ESET-360.

ESET-480 — ELECTROMAGNETIC PROPAGATION AND TRANSMISSION LINES 3 credits
This course introduces the student to electromagnetic (EM) propagation, antennas, and transmission line theory. After an introduction to the theory of electric and mag-

netic fields, the student is presented with the theory and properties of electromagnetic propagation. Course coverage includes transmission line components for twisted pair. coaxial cable, waveguide, microstrip and stripline, and fiber-optic cable. Additionally, antenna theory is introduced. Topics include antenna characteristics, gain, beamwidth, bandwidth, and antenna systems, dipole antennas, linear and microstrip arrays, and aperture antennas. PREREQUISITE: ESET-360.

Energy Systems Technology

ENGY-110 — THEORY OF CONTROLS 3 credits
A course designed to deal with the basic theories and concepts required by both air conditioning and heating service people. Topics covered include: Basic electricity, meters, principles of motor operation, transformers and relays, along with an introduction to control circuits. These studies are essential in order that the individual comprehends the control circuits to which he or she will be exposed in future courses.

ENGY-120 — ENERGY SYSTEMS LAB 1 2 credits
This course deals with the development of the manual and technical skills required in the heat/power/air conditioning industry. Attention is given to current principles and practices that apply to the care and use of hand tools and measuring devices, basic machines, tubing and piping, soldering, equipment service and installation, fundamental electric circuit wiring and field service training.

ENGY-132 — ENGINEERING GRAPHICS 331 2 credits
A course that deals with the breakdown of a 3 dimensional object into simpler 2 dimensional views. These views are used to show internal shapes and dimensions of the object. Emphasis is placed on the basic skills such as proper use of drafting instruments and producing neat, concise drawings. Course includes an introduction to computer-assisted design (CAD).

ENGY-220 — COMBUSTION CONTROL CIRCUITS 3 credits
Domestic and light commercial heating control systems for steam, forced warm air and forced hot water, and the components which make up each control system are covered in detail. Residential and commercial oil burners and their components, thermostats, and basic trouble-shooting are also covered during this semester. PREREQUISITE: ENGY-110.

ENGY-230 — ENERGY SYSTEMS LAB 2 2 credits
An advanced course that is predominantly a laboratory program. Instruction is directed toward the student achieving competency in specialized skill areas, including electrical control wiring, oil burner installation and servicing, and heating system-related components installation. Specific lab assignments directed toward installation and set-up of residential and commercial control systems. PREREQUISITE: ENGY-120.

ENGY-240 — PRINCIPLES OF REFRIGERATION 3 credits
The science of refrigeration is based on physics, chemistry, and the transfer of heat which forms the foundation for an understanding of the refrigeration process. After these principles are learned in the first few weeks, emphasis is placed on the refrigeration cycle and its components. A study is made of the properties of the refrigerants that are used in the different applications, and of the instruments that are necessary in the servicing of these systems, both domestic and commercial. Extensive lab assignments

also bring to the students a hands-on approach to the analyzing and servicing of refrigeration and air conditioning systems.

ENGY-320 — HEATING SYSTEM DESIGN 3 credits
A lecture course designed to acquaint the student with the proper principles used in designing heating systems. A thorough coverage is made of heat transfer through building materials essential in the calculations of heat losses, for both residential and commercial structures. The student will develop the knowledge required to design efficient heating systems.

ENGY-330 — POWER PLANT OPERATION 1 3 credits
An extensive study is made of the complex systems that make up the steam generation plant. Emphasis is placed on: boiler and steam generators and their classification and structural design, applied mechanics and related equipment such as heaters, receivers, pumps and piping systems. Combustion and the transfer of heat released by the burning of fuels requires a study of thermodynamics and the heat capacities of different substances. Steam tables and other charts are used. Chimneys and the mechanical draft equipment required for the combustion process are also studied.

ENGY-340 — FUNDAMENTALS OF AIR CONDITIONING 3 credits
With the knowledge gained in Principles of Refrigeration (ENGY-240), a more advanced study is emphasized through extensive lab assignments dealing with the larger systems. Motors and motor safety controls, as well as other related electrical components, including relays, contactors, and transformers. Schematics and testing instruments. are used in performing service and diagnostic functions. The lecture series is an in-depth study concerned with the application of the engineering principles used in the design of conditioning systems. These include psychrometrics, building surveys and load estimating procedures, ductwork and air distribution systems. PREREQUISITE: ENGY-240.

ENGY-350 — MICROPROCESSOR CONTROLS 3 credits
This course is designed to acquaint the student with microprocessor-based control systems as used on residential, commercial, and industrial applications. A wide range of control devices is studied, ranging from a mechanical thermostat to a fully programmable digital controller. The laboratory portion of this course will provide the student with hands-on experience in the application of commercial and industrial control systems using microprocessor-based and programmable controllers. PREREQUISITE: ENGY-220.

ENGY-411 — ADVANCED HEATING SYSTEM DESIGN 4 credits
This course is designed to acquaint the student with the proper principles and procedures in designing steam and hot water heating systems. Topics include specifications and data for piping and heating system components such as boilers, heat distributing units, pumps, valves, and fittings. Instruction is given in the layout of one-pipe steam systems, series loop and one-pipe venturi forced hot water systems, and radiant heating systems. In addition, the sizing and piping of indirect domestic hot water heaters is covered. PREREQUISITE: ENGY-320.

ENGY-425 — BUILDING MANAGEMENT SYSTEMS 4 credits
This course is an in-depth study of computer-controlled building management systems monitoring all energy-related functions including the heating, air conditioning, lighting, and other environmental systems. The course will include system automation, sensors for monitoring various points in the facility, energy management system software, and remote access to the system. In the laboratory portion of this course, the student will interface the computer operations with the heating and air conditioning systems to provide a totally automated building environment. PREREQUISITE: ENGY-350.

ENGY-430 — POWER PLANT OPERATION 2 3 credits
A comprehensive study geared to an actual power plant. The College's own complex, and others in the local area are used to acquaint the student with typical power plant operations. An in-depth study is made of the components that make up the entire power station and the different combustion control methods required for safety and efficiency. Boiler feed-water treatment is a must for power engineering students because of the effects of the scale-forming salts found in water supply systems. PREREQUISTE: ENGY-330.

ENGY-435 - H.V.A.C. ELECTRICAL APPLICATIONS 3 credits
This course will offer the student the ability to utilize theory from previous courses in real world electrical HVAC applications. Course content will include further and continued study of electrical systems and circuitry, including: controls, schematics, troubleshooting and computer-based system analysis. Three hours lecture. PRERREQUISITES: ENGY-110, ENGY-240.

Engineering and Science Transfer
(*See* Engineering Transfer)

Engineering Transfer
Option to Engineering & Science Transfer

ENGR-100 — SPECIAL PROJECTS IN ENGINEERING 1 1, 2, 3, or 4 credits
Special projects in engineering under the direction of an instructor. PREREQUISITE: Permission of the Department Chairperson.

ENGR-101 — SPECIAL PROJECTS IN ENGINEERING TECHNOLOGY 1 1, 2, 3 or 4 credits
Special projects in Engineering Technology under the direction of an instructor. PREREQUISITE: Permission of Department Chairperson.

ENGR-102 — SPECIAL PROJECTS IN ENGINEERING TECHNOLOGY 2 1, 2, 3, or 4 credits
Continuation of Special Projects in Engineering Technology 1. PREREQUISITE: Permission of the Department Chairperson.

ENGR-106 — INTRODUCTION TO COMPUTER-AIDED DRAFTING 1 credit
An introduction to the terminology and capabilities of the computer as an engineering design tool. Weekly lectures, laboratory exercises, and assignments will acquaint students with the available CAD software and hardware, and will enable them to produce dimensioned orthographic drawings and libraries of symbols and shapes useful in engineering applications.

ENGR-109 — INTRODUCTION TO ENGINEERING GRAPHICS 1 credit
This course is an introduction to the tools and techniques of technical drawing. Traditional multiview layouts using orthographic projection, isometric view, section views, and auxiliary views will be covered. Freehand isometric sketching will be practiced, and drawings will be executed in paper and pencil on drawing board, using T-square,

ruler, compass, and French curve. The student will learn elements of descriptive geometry and conventions of dimensioning and notation. PREREQUISITE: None.

ENGR- 200 — SPECIAL PROJECTS IN ENGINEERING 2 1. 2, 3, or 4 credits
Continuation of ENGR-100. PREREQUISITE: Permission of Department Chairperson.

ENGR-203 — COMPUTER APPLICATIONS IN ENGINEERING 4 credits
An introductory course in engineering that utilizes various computer applications to assist in the analysis and communication of the design of an engineering assembly. One third of the course will be devoted to Computer Aided Drafting. Three-dimensional wireframe and solid models will be created. Orthographic projections, auxiliary views, isometric views, dimensioning, and assembly drawings will be discussed. The second third of the course will introduce the spreadsheet as an engineering problem-solving tool that facilitates complex calculations, rapid graphical analysis, and numerical modeling. The remaining third of the course will be used to introduce design criteria for assembly, and oral and written presentations. The oral presentations will be facilitated using PowerPoint software. CO-REQUISITES: MATH-155, MATH-132, MATH-145 or MATH-232.

ENGR-303 — INTRODUCTION TO MECHANICAL DESIGN 3 credits
Lectures will cover the principles of engineering graphics, an introduction to modern techniques of engineering design, and how to manage associated CAD activity. Specific topics will include multiview drawings, auxiliary views, sectioning; fastening methods (screws, rivets, welds, etc.); motion/force elements (springs, gears, cams, etc.); dimensioning and tolerancing; electromechanical components; pneumatic and hydraulic components; idea generation; the CADL language; and pictorials, renderings, and solid shading. PREREQUISITE: ENGR-203.

ENGR-310 — MECHANICS 1 (STATICS) 3 credits
This is the first mechanics course for engineering majors. It is a vector approach to the solution of equilibrium problems for particles, rigid bodies, and multi-membered structures (frames, machines, and trusses). In order to broaden the scope of problems available for analysis, the student is introduced to the study of friction forces and centroids. Also, for preparation for future mechanics courses, the topics of moment of inertia and shear and bending moments are introduced. PREREQUISITE: MATH-155 and PHYS-132.

ENGR-320 — CIRCUIT ANALYSIS 1 3 credits
Mathematical models will be developed to describe the behavior of practical voltage and current sources and resistors, capacitors, inductors, diodes, transistors and operational amplifiers (op-amps). Techniques for the analysis of voltage, current, and power relationships among these devices interconnected in circuits will be practiced. Analysis techniques will include Kirchoff's Laws, loop and nodal analysis, the superposition theorem, and Thevenin's and Norton's theorems. DC applications (constant in time) as well as AC applications (varying sinusoidally with time) will be considered. Treatment of AC applications will include an introduction to phasor analysis and the concept of complex frequency. PREREQUISITES: MATH-255 and PHYS-132.

ENGR-324 — ELECTRICAL ENGINEERING LAB 1 1 credit
This course offers laboratory experiments that test the theoretical analysis techiques presented in ENGR-320. These experiments involve measurement of voltage and current signals in circuits consisting of resistors, inductors, and capacitors. Diodes, transistors, and operational amplifiers (op-amps) are also investigated. Laboratory workstations are equipped with current-controlled and voltage-controlled power supplies, signal generators, digital multimeters, oscilloscopes, and breadboards for intercon-

necting discrete devices. The P-Spice computer program will be introduced as a tool of analysis. A formal written report is required for each experiment.
CO-REQUISITE: ENGR-320.

ENGR-330 — INTRODUCTION TO MATERIALS SCIENCE AND ENGINEERING 3 credits
A survey of the materials of engineering and the atomic, molecular, and crystal phenomena responsible for their properties. The unifying theme is that the structures of materials determine their properties. Materials considered include alloys, semiconductors, polymers, and ceramics. Homework and tests are designed to build technical vocabulary and facility with tabulated and graphic data in solving basic materials analysis and design problems. PREREQUISITE: CHEM-103.

ENGR-335 — MECHANICS OF MATERIALS 3 credits
Engineering applications of the principles of solid mechanics. Uniaxial and torsional problems are discussed, followed by beam deflections. Plane stress and strain are then presented, followed by stability problems in column design. PREREQUISITES: ENGR-310 and MATH-255.

ENGR-340 — INTRODUCTION TO CHEMICAL ENGINEERING 3 credits
An introduction to the material and energy balances commonly applied to processes in the chemical, petroleum and environmental fields. Also included is a study of the pressure-volume temperature relationships of gases and a brief introduction to selected thermodynamic properties of solids, liquids, and gases. Computer solutions are utilized in selected problems. PREREQUISITES: MATH-255, CHEM-203, ENGR-203.

ENGR-350 — ENGINEERING THERMODYNAMICS 1 3 credits
A classical presentation of thermodynamics including the first and second laws and their application to batch and flow processes. Ideal gas, real gas, graphical, and tabular relationships among the physical properties of substances which are affected by energy transformations including pressure, temperature, volume, internal energy, enthalpy, and entropy. Heat engines, heat pumps, and carnot cycles. PREREQUISITES: MATH-255, PHYS-132, CHEM-103.

ENGR-351 — ENGINEERING THERMODYNAMIC COMPUTATIONAL LAB 1 credit
This computational laboratory introduces the latest software, and discusses the various computational techniques necessary to permit students to solve all of their thermodynamic and related engineering problems with a computer. Analytical, graphical, and numerical methods are discussed. Students will take this course concurrently with ENGR-350, Engineering Thermodynamics, so that all of their homework will be submitted using the computer. A final capstone project will be required in this course. COREQUISITE: ENGR-350.

ENGR-410 — MECHANICS 2 (DYNAMICS) 3 credits
Vector calculus is developed and applied to the solution of kinematic and kinetic problems involving particles and rigid bodies. Different coordinate systems are utilized and kinetics analysis is applied using force balances, the impulse momentum principle, and the work energy theorem. PREREQUISITE: Mechanics 1 ENGR-310.

ENGR-411 — PROBABILITY AND STATISTICS FOR ENGINEERS 3 credits
This course will equip an engineering student with the knowledge needed to understand the interaction of variables in engineering design such as material failures, poor quality, missed schedules, and poor engineering. Topics to be covered include descriptive statistics, measure of location and variability, discrete random variables, Bays theorem, binomial theorem, poisson theorem, continuous random variable, joint probability, covariance and correlation, point estimate, confidence intervals, hypothesis testing, and linear regression. PREREQUISITE: MATH-255

ENGR-420 — CIRCUIT ANALYSIS 2 3 credits
A continuation of ENGR-320, this course develops mathematical tools for the analysis of circuits consisting of resistors, inductors and capacitors driven by voltage and current sources which are periodic functions of time. Topics covered include complex power, poles and zeroes in the complex frequency domain, two-port transfer functions, forced and natural response, resonance, Fourier series, and the LaPlace Transform. PREREQUISITE: ENGR-320.

ENGR-421 — ENGINEERING MEASUREMENTS AND ANALYSIS 2 credits
This course is an introduction to engineering measurements and analysis, relating scientific principles to engineering applications, stressing experimental methods, data acquisition, and processing. PREREQUISITES: PHYS-132, PHYS-232, ENGR-320.

ENGR-423 — ACTIVE NETWORKS 3 credits
Topics include an introduction to the physics of the p-n semiconductor junction diode, the NPN and the PNP bipolar junction transistor (BJT), BJT biasing circuits, the field effect transistor (FET), FET biasing circuits, small signal analysis in the BJT and FET, multistage circuits and frequency response, feedback amplifiers and oscillator circuits, and switching circuits for digital logic applications. The circuit analysis program PSPICE will be utilized extensively. PREREQUISITE: ENGR-320, CSCI-320, or ENGR-322; COREQUISITE: ENGR-420.

ENGR-427 — ELECTRICAL ENGINEERING LAB 2 1 credit
This course offers laboratory experiments that test the theoretical analysis techniques presented in ENGR-420. Circuits consisting of resistors, inductors, and capacitors connected to signal generators will be investigated by measuring voltages, currents, and impedances. Measurements will be made with AC meters and with oscilloscopes in the time domain and in the frequency domain. Students will investigate frequency response, resonance, and amplification. Experiments will also investigate the characteristics of diodes,transistors, and operational amplifiers driven by time-varying signals. The P-Spice computer program will be used as a tool of analysis. A formal written report on each experiment is required. CO-REQUISITE: ENGR-420.

ENGR-440 — CHEMICAL ENGINEERING THERMODYNAMICS 1 3 credits
An introductory course dealing with the fundamental concepts and laws of thermodynamics and of the thermodynamic properties of materials. The major emphasis is on chemical systems. PREREQUISITE: ENGR-340.

ENGR-482 — INTRODUCTION TO EMBEDDED MICROCONTROLLERS 2 credits
This is an introductory course designed to acquaint the student with the use of microcomputers in an embedded microcontroller that interacts with and controls an electrical environment. All microcomputers have the same features and capabilities needed to perform a wide range of tasks. These features include at least one working register and at least one timer register. They also have the ability to interrupt the program sequence through internal and external means. All of the above is controlled by software. The student will learn how to use all the specific instructions while producing programs to perform different hardware tasks. The emphasis will be on hardware control rather than hardware design. The course will meet for a one-hour lecture in which the features and their software control will be covered. This will be followed immediately by a two-hour hands-on session where the student will write, compile, and simulate the programs needed to perform the desired task. The students will also test their programs to see if they accomplish the hardware task at hand.
PREREQUISITES: CSCI-110, ENGR-320.

English

English as a Second Language

ERDG-055 — READING 1 ESL 3 credits
Reading 1 ESL offers basic reading skills to students for whom English is a second language. Its main objective is to improve pronunciation and vocabulary. This is done by developing visual and auditory recognition and decoding skills used with English sound and words. Some comprehension and study skills will be included in the course.

EESL-080 — ENGLISH AS A SECOND LANGUAGE LEVEL 1 3 credits
This is a beginning English language class for those students who have little or no previous experience with English. It is an introduction to basic vocabulary and fundamental grammar in English. The emphasis is on the present tense with an introduction to the past tense. Some of the classes feature multimedia techniques (text, audio, and video integrated through a computer) and are presented in a special multimedia classroom. This course must be taken jointly with ERDG-081 and ECNV-082. Pre-tests are used to evaluate the level of competency of students. A grade of "C" or better is required to pass this course. This is a developmental course. Credit for this course will not be counted toward fulfilling graduation requirements at STCC.

ERDG-081 — ERCB ENGLISH READING COMPREHENSION FOR BILINGUALS LEVEL 1 3 credits
This is a basic course in reading, writing, and vocabulary development. Reading techniques such as identifying the main idea and details, guessing the meaning of new words from context, and skimming and scanning are covered. In writing, students learn to write basic sentences, and progress to simple paragraphs. Some of the classes feature multimedia techniques (text, audio, and video integrated through a computer) and are presented in a special multimedia presentation classroom. This course must be taken jointly with EESL-080 and ECNV-082. A grade of "C" or better is required to pass this course. This is a developmental course. Credit for this course will not be counted toward fulfilling graduation requirements at STCC.

ECNV-082 — BASIC SKILLS IN CONVERSATION LEVEL 1 3 credits
This is a beginning conversation course with emphasis on aural/oral skills. The focus of the course is on improving listening comprehension and increasing conversational fluency. Through a broad range of student-centered activities, students are given the opportunities to practice and reinforce important grammatical structures and patterns. The course must be taken jointly with EESL-080 and ERDG-081. A grade of "C" or better is required to pass this course. Note: Students must receive a grade of "C" or higher in each of the three classes described above (EESL-080, ERDG-081, and ECNV-082) in order to pass Level 2 classes (EESL-083, ERDG-084, ECNV-085). If a student receives a grade of "C-" or lower in EESL-080, ERDG-081, or ECNV-082, he or she must repeat all three classes. This is a developmental course. Credit for this course will not be counted toward fulfilling graduation requirements at STCC.

EESL-083 — ENGLISH AS A SECOND LANGUAGE LEVEL 2 3 credits
This is an intensive course designed for advanced beginning students of English as a Second Language. Through extensive oral drills and written exercises, the course offers students an opportunity to master the fundamentals of English grammar and usage. Students will learn to use simple verb tenses in English and learn the parts of speech to form proper English sentences. This is a developmental course. Credit for this course will not be counted toward fulfilling graduation requirements at STCC.

ERDG-084 — ENGLISH READING COMPREHENSION FOR BILINGUALS LEVEL 2 3 credits

This course for advanced beginning students is a review of the language skills introduced in EESL-083, and is offered jointly with it. The focus of this course is on reading and writing development in English through exercises in the text, dictations, spelling drills, written classwork, and homework assignments. Learning to write one paragraph well is emphasized. Recognition and implementation of the title and topic sentence, and good paragraph development and form are essential to complete the course objectives. Students are encouraged to use word processing on paragraph assignments; class at times may be scheduled in the computer room. Use of the multimedia room may also be scheduled during class time to help students understand the parts of a paragraph and instruct them on how to write good paragraphs. This is a developmental course. Credit for this course will not be counted toward fulfilling graduation requirements at STCC.

ECNV-085 — BASIC SKILLS IN CONVERSATION LEVEL 2 3 credits

This course is designed for advanced beginning students of English as a Second Language. Emphasis is on the development of listening comprehension and speaking skills in English. It is offered in conjunction with EESL-083 and ERDG-084. Through a broad range of student-centered activities, students are given an opportunity to practice and reinforce important grammatical structures and patterns. While these activities take various forms—role-playing, extended guided conversations, questions about the students' real world, and topics for classroom discussion or debate—they are intended to actively engage the students in meaningful conversation based upon their interests, backgrounds, and imagination. Students must earn a passing grade of "C" or better in each of the Level 2 courses—EESL-084, ERDG-084, and ECNV-085—before continuing to ESL Level 3 courses. PREREQUISITES: To enter ESL 2, ERDG 2, and ECNV 2, students must either have successfully completed EESL 1, ERDG 1, and ECNV 1, or have scored at the appropriate level on the placement examinations of the English as a Second Language program. This is a developmental course. Credit for this course will not be counted toward fulfilling graduation requirements at STCC.

EESL-086 — ENGLISH AS A SECOND LANGUAGE LEVEL 3 3 credits

This grammar course is intended for students who have a high/intermediate level of English. It is assumed that the students who have enrolled in EESL-086 have either successfully completed courses EESL-080-ECNV-085 or have been tested and placed into the Level 3 curriculum. EESL-086 is given jointly with ERDG-087 and EWRT-088. The focus of this course will be on complex verb forms, syntactical structures, and mechanics. A grade of "C" or better in all three courses must be attained to pass on to the next level. If a student fails to achieve a grade of "C" or better in any one of these courses, all three of the courses must be repeated. This is a developmental course. Credit for this course will not be counted toward fulfilling graduation requirements at STCC.

ERDG-087 — ENGLISH READING COMPREHENSION FOR BILINGUALS (ERCB) 3 credits

This reading course is intended for students who have a high/intermediate level of English and is given jointly with EESL-086 and EWRT-088. The focus of this course is on the development of vocabulary, reading comprehension, and critical thinking. Students are required to read textbook material which covers a variety of cultural and/or literary material. Exercises to test comprehension and to review grammar and syntax will also be included. In addition, students will be asked to do outside readings which may include newspaper articles as well as a fiction or non-fiction book. Students will demonstrate their understanding of these materials by way of oral and written discussions. A grade of "C" or better is required to pass this course. Please note: Level 3 courses EESL-086, ERDG-087, and EWRT-088 are part of an intensive unit. All three courses must be taken together.

A grade of "C" or better in all three courses must be attained to pass on to the next level. If a student fails to achieve a grade of "C" or better in any one of these courses, all three of the courses must be repeated. This is a developmental course. Credit for this course will not be counted toward fulfilling graduation requirements at STCC.

EWRT-088 — BASIC WRITING SKILLS 1 3 credits
This course is designed to meet the needs of students who have attained a high intermediate level of English. It is given in conjunction with EESL-086 and ERDG-087. The course will provide practice in writing paragraphs and essays, moving from very simple to more complex topics. The emphasis is on writing in various methods of discourse, grammar and mechanics. A grade of "C" or better is required to pass this course. Please note: Level 3 courses EESL-086, ERDG-087, and EWRT-088 are part of an intensive unit. All three courses must be taken together. A grade of "C" or better in all three courses must be attained to pass on to the next level. If a student fails to achieve a grade of "C" or better in any one of these courses, all three of the courses must be repeated. This is a developmental course. Credit for this course will not be counted toward fulfilling graduation requirements at STCC.

ERDG-089 — ESL READING 3 credits
This course is intended to continue the ESL student's development in the reading process in preparation for college-level reading in English. Four basic areas are emphasized: reading for pleasure, developing comprehension and critical thinking skills, expanding vocabulary, and reading faster. Student-centered individual and group activities are used extensively in the classroom. Students chart their progress in terms of increasing reading rate. This is a developmental course. Credit for this course will not be counted toward fulfilling graduation requirements at STCC. CO-REQUISITES: EWRT-093 and EESL-094. A grade of "C" or higher in all three courses is required to pass. PREREQUISITE: ERDG-087 or placement.

EESL-094 — ESL LEVEL 4 3 credits
This grammar course is intended for students who have mastered a high-intermediate level of English. It offers a comprehensive review of Level 2 and 3 structures, such as perfect verb tenses, modal auxiliaries, the passive voice, and compound/complex sentencs. Students practice the verb tenses in integrated exercises. The review of complex syntactical patterns also covers appropriate mechanics. New grammar encompasses more advanced forms. Future perfect tenses, noun clauses, gerunds, infinitives, modal perfects, unreal conditionals, and the subjunctive mode are covered. This is a developmental course. Credit for this course will not be counted toward fulfilling graduation requirements at STCC.
CO-REQUISITES: ERDG-089 and EWRT-093. A grade of "C" or higher in all three courses is required to pass. PREREQUISITE: EESL-086 or placement.

Developmental English

DRDG-091 — READING LEVEL 1 3 credits
Reading 1 offers practice in active reading skills for improved comprehension and efficiency, as well as vocabulary development using a variety of materials from textbooks, literature, and periodicals. Students will be introduced to the STCC Library in this course. This is a developmental course. Credit for this course will not be counted toward fulfilling graduation requirements at STCC.

DRDG-092 — READING LEVEL 2 3 credits
Reading 2 emphasizes critical reading, addressing general and specific comprehension skills for library research, reading textbooks, technical material and literature. Vocabulary development focuses on context and structural analysis. This is a developmental course. Credit for this course will not be counted toward fulfilling graduation requirements at STCC.

EWRT-093 — BASIC WRITING SKILLS 2 3 credits
This course is intended to continue the ESL student's development of the writing process, providing needed practice in preparation for English Composition 1. It offers an in-depth review of paragraph and essay development. New material emphasizes expository essay writing for academic purposes, which is focused on a selection of major rhetorical modes. A review of the Library's online catalog as well as an introduction to academic research using library databases is also part of the curriculum for this course. This is a developmental course. Credit for this course will not be counted toward fulfilling graduation requirements at STCC. CO-REQUISITES: ERDG-089 and EESL-094. A grade of "C" or higher in all three courses is required to pass. PREREQUISITE: EWRT-088 or placement.

DWRT-099 — REVIEW FOR COLLEGE WRITING 3 credits
This course provides a review of basic English skills in grammar, sentence structure, paragraphing, and essay development to prepare students for college-level writing. The course, intended for students who have had difficulty with written English, provides preparation for ENGL-100, but it cannot be counted for graduation credit. A grade of "C-" or better in DWRT-099 is required for admission to ENGL-100. This is a developmental course. Credit for this course will not be counted toward fulfilling graduation requirements at STCC.

English

NOTE 1: All college-level English courses require proficiency in the spoken and written English language. To enter college-level courses, students must score into ENGL-100 on the STCC English placement test, or pass DWRT-099.

NOTE 2: College-level English courses may be taken no more than twice.

ENGL-100 — ENGLISH COMPOSITION 1 3 credits
The objective of this course is to improve the student's ability to communicate effectively in writing. Areas covered in this course will include introduction of basic writing patterns, effective construction of paragraphs and essays, and preparation of the documented research paper.

ENGL-101— COLLEGE ENGLISH 2 3 credits
This course is a continuation of English Composition 1 with specific emphases on developing critical thinking skills; analyzing and interpreting college-level texts; utilizing primary and secondary research sources; and continuing development of effective writing methodologies and skills. PREREQUISITE: ENGL-100 and permission of NextStep advisor. Restricted to Verizon New England NextStep program

ENGL-110 — HONORS ENGLISH COMPOSITION 1 3 credits
This honors-level Composition 1 course parallels the standard description for a section

of ENGL-100. The objective of this course is to improve the student's ability to communicate effectively in writing. Areas covered will include introduction of basic writing patterns, effective construction of paragraphs and essays, and preparation of the documented research paper. In addition, students will be required to submit work that is representative of honors-level coursework. To that end, more time is dedicated to developing argumentation and research skills. Two documented research papers will be assigned. All work for the course will be kept in a portfolio; at the end of the semester, students will submit a portfolio review essay, critiquing their progress. Equivalent to ENGL-100. PREREQUISITE: DWRT-099, minimum grade C-

ENGL-200 — ENGLISH COMPOSITION 2: AN INTRODUCTION TO LITERATURE 3 credits

This course involves the close reading and class discussion of fiction, poetry and plays, and writing essays about literature. Emphasis is on the role of individual literary works as expressions of universal human experience. PREREQUISITE: ENGL-100.

ENGL-201 — BUSINESS ENGLISH 3 credits

This course is designed to prepare business students to meet the requirements of writing all kinds of communications in the business world, emphasizing the construction of proper business letters, resumes, and memoranda. Students develop an understanding of correct style, form, and tone and gain an ability to write clear and concise business communications. PREREQUISITE: ENGL-100.

WRIT-202 — TECHNICAL REPORT WRITING 3 credits

Instruction has been organized to emphasize methods involved in the writing process. Special emphasis has been placed on the factors which report writers must consider and the processes they must follow in writing a report. Students will become acquainted with the techniques of analyzing a writing situation, methods of investigating the problem, organizing the report, and preparing the final copy. PREREQUISITE: ENGL-100.

SPCH-203 — FUNDAMENTALS OF SPEECH 3 credits

Everyone must communicate in life, and this course is about communicating in personal affairs, employment, and society. Students will write and present talks about a variety of topics and situations. Being educated means having something to say; this course will help you say it.

ENGL-210 — HONORS ENGLISH COMPOSITION 2 3 credits

This honors-level English Composition 2 course parallels the standard description of Introduction to Literature: close reading and class discussion of fiction, poetry, plays, and essay assignments involving writing about literature. In this course, reading and writing assignments are appropriate to the honors level. A research essay and a 20-minute presentation to the class are required. PREREQUISITE: ENGL-100,minimum grade A-; or ENGL-110, minimum grade B.

ENGL-300 — LITERATURE OF THE WESTERN WORLD: BC TO 17TH CENTURY 3 credits

This course examines literary classics of Western culture to develop both an appreciation of their intrinsic worth and an awareness of their significance in the history of ideas and literature. Readings are from the Biblical, Classical, Medieval, and Renaissance periods, and may include portions of the Old Testaments; selections from epic narratives such as Homer's *Odyssey,* Virgil's *Aeneid*, and Milton's *Paradise Lost*; selected poetry of Sappho, Catullus, Petrarch; selections from frame narratives such as Dante's *Inferno* and Chaucer's *Canterbury Tales*. Three hours' lecture. PREREQUISITE: ENGL-100; ENGL-200 is strongly recommended.

ENGL-301 — ENGLISH LITERATURE: ANGLO-SAXON TO NEOCLASSICAL PERIODS 3 credits
Readings in English literature from the Anglo-Saxon to the Neoclassical periods are studied with attention to their content and style. Such works as *Beowulf, The Canterbury Tales, King Lear,* and *Paradise Lost* are examined as representations of major literary and intellectual movements in Britain. PREREQUISITE: ENGL-100: RECOMMENDED: ENGL-200. Honors component available.

ENGL-302 — AMERICAN LITERATURE: 1620-1860 3 credits
The growth of American literature from the Colonial period to the Civil War reflects major developments in American thought, beliefs, and values. Such writers as Bradford, Bradstreet, Edwards, Franklin, Hawthorne, Emerson, Thoreau, and Stowe will be the basis of our close, critical reading and discussion, representing our literary and intellectual heritage. PREREQUISITE: ENGL-100: RECOMMENDED: ENGL-200. Honors component available.

ENGL-304 — INTRODUCTION TO AFRICAN-AMERICAN LITERATURE 1 3 credits
This course is designed to accomplish two aims. First, there will be a concentrated study of the writings of African Americans, including the oral tradition. Secondly, this course will focus on developing an awareness of the unique quality of African-American life and culture, as well as of its contributions to world literature. Honors component available. PREREQUISITE: ENGL-100

ENGL-305 — CHILDREN'S LITERATURE 3 credits
Children's Literature is an elective one-semester survey course. Students read and analyze picture storybooks, folklore, children's poetry, and young adult novels. Selections are multicultural. PREREQUISITE: ENGL-100; RECOMMENDED: ENGL-200

ENGL-308 — WOMEN IN LITERATURE 3 credits
This course will focus on the roles, myths, and stereotypes of women in different historical periods, and relate these roles to the social structure, the status, and function of women in the particular social setting in which the literary works were written. The study will enable us to discover to what extent the image of women in literature reflects reality, and to what extent it is an ideal encouraged to keep women in a particular role. An anthology of short stories by internationally-known women writers is a required text, along with Kate Chopin's novel *The Awakening.* PREREQUISITE: ENGL-100; RECOMMENDED: ENGL-200. Honors component available.

JOUR-309 — INTRODUCTION TO JOURNALISM 3 credits
An introductory course designed to explore the overall area of journalism as related to producing a weekly student newspaper. The class is conducted as a workshop with instruction focused on news reporting, feature writing, and page layout.

THTR-310 - 312 — COLLEGE THEATER WORKSHOP 1, 2, & 3 1, 2, or 3 credits
This is a play production course. Each semester a play is chosen to be prepared and performed at the end of the semester. Students may select one, two, or three credits and participate on a limited or standard course time basis. Students will be involved in various theater activities: acting, set construction, set decoration, props, lights, and costumes. This course may be taken by students, faculty, and staff as a co-curricular activity with or without credit. PREREQUISITES: SPCH-203 or ENGL-100.

ENGL-321 — INTRODUCTION TO CREATIVE WRITING: POETRY 3 credits
The emphasis of this course is on the writing of poetry, although students will also have the opportunity to write fiction and drama, using contemporary and traditional models for their work. During the semester, students will write poems in a variety of

forms from free to formal verse including haiku, sonnets, villanelles, sestinas, ghazals, and pantoums. For each genre, students will practice appropriate strategies, including the use of imagery, metaphor, rhyme and rhythm, point-of-view, dialogue, characterizations, and plot development. Preparation of a portfolio is required of each student. Final projects will include a class reading of finished pieces and publication of a literary magazine. PREREQUISITE: ENGL-200, or ENGL-100 and permission of instructor. Honors component available.

ENGL-329 — LATINO WRITERS IN THE U.S. 3 credits
This course will introduce students to contemporary writings by Latino writers who are living or have lived in the U.S. Students will develop a greater understanding of one of America's largest, most diverse, minority populations and the social, cultural, and economic issues with which it contends. Close reading of works in various literary genres (including social and cultural criticism) will be used to expand on such issues and themes as assimilation, cultural and gender identity, ethnic identification, cultural conflicts, cultural isolation, political and economic struggles, and perceptions of mainstream America. PREREQUISITE: ENGL-100; ENGL-200 recommended.

ENGL-345 — THE AMERICAN AND EUROPEAN SHORT STORY 3 credits
This course explores the evolution of the short story. Born from the epic tale and Westernized by Chaucer, the short story emerged in the mid 19th century. This course analyzes and evaluates the major classic and contemporary short story writers, along with their techniques and contributions to our literary heritage. An anthology of classic and contemporary short stories featuring internationally-recognized authors is the basis of study.

ENGL-351 — NON-WESTERN LITERARY VOICES 3 credits
This course involves reading and discussion of 20th century fiction, plays, poetry, and non-fiction of several regions of the non-Western world such as Africa, the Middle East, south Asia, and east Asia. Literary selections will be studied in relation to their cultural context and their expression of universal human experience. PREREQUISITE: ENGL-100; ENGL-200 recommended.

ENGL-400 — LITERATURE OF THE WESTERN WORLD: 18TH TO 20TH CENTURIES 3 credits
This course examines significant literary works of Western culture from the 18th century to the modern era, to develop both an appreciation of their intrinsic worth and an awareness of their significance in the history of ideas and of literature. Readings are from the prose, poetry, and drama of the Age of Enlightenment, the Romantic period, the period of Naturalism, and the early 20th century. Readings may include selections from Moliere's *Tartuffe*, Swift's *Gulliver's Travels*, Voltaire's *Candide*, Rousseau's *Confessions*, Goethe's *Faust*, Shelley's *Frankenstein*, Flaubert's *A SImple Heart*, Dostoyevsky's *Notes From the Underground*, Woolf's *A Room of One's Own*, and other brief works. Three hours' lecture. PREREQUISITES: ENGL-100, ENGL-200.

ENGL-401 — ENGLISH LITERATURE 2: ROMANTICISM TO MODERNISM 3 credits
This course is a continuation of English Literature 1 and consists of readings from the Romantic period to the twentieth century. Works of such writers as Wordsworth, Coleridge, Keats, Dickens, the Brownings, Joyce, and Woolf may be included in the course. The works are studied from the same critical perspective and with the same emphasis as in ENGL-301. PREREQUISITE: ENGL-100; RECOMMENDED: ENGL-200. Honors component available.

ENGL-402 — AMERICAN LITERATURE: 1860-PRESENT 3 credits
Readings of American fiction, poetry, and drama from the Civil War to the present, ranging from Whitman, Dickinson, Twain, James, to Frost, Fitzgerald, Hemingway, Faulkner and several contemporary writers. This course continues the survey of American literature from the same critical perspective as ENGL-302. PREREQUISITE: ENGL-100; RECOMMENDED; ENGL-200. Honors component available.

ENGL-404 — INTRO. TO AFRICAN-AMERICAN LITERATURE 2 3 credits
This course is designed to accomplish two aims. First, there will be a concentrated study of the writings of African-Americans from slavery to the present, including not only the usual fiction, essays, and poetry, but also folk tales, orations, and slave narratives. There will also be some exploration of the role of African-American women in fiction. Secondly, this course will focus on developing an awareness of the unique quality of the African-American experience as it has defined the various modes and themes that characterize African-American literature.

ENGL-408 — WOMEN IN LITERATURE 2 3 credits
This course will serve as a natural progression of the basic survey course in Women in Literature. However, rather than focusing on short stories by women, Women in Literature 2 will examine women's short novels, plays, essays, and poetry. PREREQUISITE: ENGL-100; RECOMMENDED: ENGL-200. Honors component available.

ENGL-421 — INTRODUCTION TO CREATIVE WRITING: FICTION 3 credits
The emphasis of this course will be on the writing of fiction, although students will also have the opportunity to write poetry and drama using contemporary and traditional models for their work. During the semester, students will learn various strategies of characterization, plot development, use of dialogue and stream of consciousness, point of view and others. Assignments will include: a story in a sentence, writing a compelling scene, flash fiction, and writing the short story. Preparation of a portfolio is required of each student. Final projects will include a class reading of finished pieces and publication of a literary magazine. PREREQUISITE: ENGL-200 or ENGL-100 and permission of instructor. Honors component available.

ENGL-900 — DIRECTED STUDY IN ENGLISH variable credit
Projects for advanced individual study by special arrangement with the instructor and approval of the Department and School Chairpersons. Students are expected to demonstrate willingness and ability to work on their own with minimal assistance.

JOUR-900 — DIRECTED STUDY - JOURNALISM 3 credits
Projects for advanced individual study by special arrangement with the instructor and approval of the department chairperson and school dean. Students are expected to demonstrate willingness and ability to work on their own with minimal assistance.

LIBR-100 — LIBRARY EXPLORATION 1 credit
This course will teach students how to locate, evaluate, and use information from books to journals and from films to the Internet. Designed to encompass many subjects, the course will provide students with an opportunity to explore the literature and information sources in their program or area of academic interest. There will be group and individual projects and several surprising detours as the exploration unfolds. No prerequisites except curiosity, energy, and a willingness to expand your horizons.

LIBR-101 - LIBRARY EXPLORATION/EDUCATORS 1 credit
Why is the sky blue? How do I find a company profile? What is a luddite? Who said, "Let them eat cake" - and why? How does broadcast news affect my perceptions of the world? Primary vs secondary resource? Dictionaries, encyclopedias, online cata-

logs, indexes, databases, Internet, WWW, television, radio - whew! What to use, when to use it, why use it? Questions, questions, questions. Come explore the sea of information and let us help you acquire navigation skills that will enable you to sail the sea of life with confidence. One hour lecture. Restricted to EDUC.AA majors. PREREQUISITE: ENGL-100; CO-REQUISITE: CMPA-197.

Executive Office Administration
(*See* Information Technologies)

Finance
(*See* Business Administration)

Fine Arts
Option to Liberal Arts Transfer

ARTS-115 — COMPUTING IN THE ARTS 3 credits
This beginning computer course is for people who want to use the computer creatively in the fine arts. Three principal modes of producing computer images: bit-mapped graphics, object-oriented graphics, and image scanning - are introduced. Students use procedures-based programming to generate visual images, list processing for linguistic experimentation, and desktop publishing to explore layout and composition. Sound generation techniques are introduced. This is a lab/studio course taught on a network of Macintosh computers. PREREQUISITE: None.

ARTS-140 — ART HISTORY: PREHISTORIC TO GOTHIC 3 credits
Art History is a survey of the major visual arts of the western world: architecture, painting and sculpture of the Paleolithic Era, Ancient Egypt and Mesopotamia, the Aegean, Greece and Rome, Early Christianity and Islam, the Romanesque and Gothic periods. The course is designed to help the student to understand the impulse behind the key monuments in the history of western art. Three in-class hours weekly. PREREQUISITE: None. Honors component available.

ARTS-142 — PAINTING 1 3 credits
Easel painting in oils. Based on elementary understanding of the physical properties of oil medium, the course will emphasize individual expression within the framework of instruction in technical development, principles of pictorial composition and elements of visual representation. The main course objective is to increase students' sophistication toward aesthetic concerns and pictorial content while developing technical skills. No previous art background is required. Five in-class hours weekly.

ARTS-143 — PRINTMAKING 1 3 credits
Basic study of materials, techniques and aesthetic consideration peculiar to relief printmaking. Includes a special segment on producing monotypes and monoprints

from intaglio plates and woodblocks. Students will create a series of prints using these techniques and will develop an understanding of the printmaking process in general by studying historical and contemporary prints. No previous art background is required. Five in-class hours weekly.

ARTS-145 — FIGURE DRAWING 3 credits
The primary focus of this course is the study of the human figure as a vehicle for clarifying both perception and expression. A primary course objective is the acquisition by the student of a sense of evaluative process inherent in making and viewing art works in various drawing media. Basic drawing helpful, but not a prerequisite. Five in-class hours weekly.

ARTS-146 — DESIGN: INTRODUCTION TO ART 3 credits
A studio workshop course which teaches the basic concepts in two-dimensional design, providing the foundation needed to understand and produce significant drawings, paintings, prints, and graphic expressions. Working in collage, students complete projects emphasizing the plastic elements individually (line, shape, texture, etc.) and the aesthetic principles (rhythm, balance, unity, etc.) Main objectives of the course include establishment of a sophisticated art vocabulary, understanding of color theory, and the perception of spatial phenomena in their varied forms on two-dimensional surfaces. No previous art background is required. Five in-class hours weekly.

ARTS-147 — BASIC DRAWING 3 credits
An introduction to a variety of drawing materials, techniques, and concepts. Emphasis is placed on developing each student's individual drawing strengths and making the student critically aware of the aesthetic soundness of a wide range of drawings, as each fulfills a different, expressive impulse. No previous art background is required. Five in-class hours weekly.

ARTS-149 — DRAWING COMPOSITION 3 credits
Drawing will be approached as a basis of composition and training in observation. Emphasis will be placed on developing perceptual awareness and critical self-evaluation as means toward growth in one's abilities in visual self-expression. Students will be encouraged to explore areas of individual strengths and interests. Five (5) in-class hours weekly. PREREQUISITE: ARTS-147 or permission of instructor.

ARTS-150 — INTRODUCTION TO PHOTOGRAPHY 3 credits
An introduction to still photography using conventional and digital cameras, this course is designed as an overview of the principles, methods, and aesthetic considerations employed by the photographer. Contemporary applications used by commercial and fine arts photographers, as well as historical precedents, will be addressed through weekly lectures and critiques of student work. Students are required to have access to their own 35mm manually-operated camera. Digital cameras will be provided for projects requiring their use. Students will be required to purchase film and pay for processing costs. PREREQUISITE: None

ARTS-152 — PHOTOGRAPHY 2 3 credits
A continuation of ARTS-150 with an emphasis on black and white photographic techniques. Topics include darkroom practices, and contemprary photography and its application; development of personal style will also be included. Lecture five hours. PREREQUISITE: ARTS-150

ARTS-160 — DIGITAL WORKSHOP 3 credits
This is a project-based class which teaches fundamentals of visual design and its relationship to written language and to mathematics. Students use digital cameras for gathering images. They learn how to bring digital images into the computer, how to manipulate these digital images, and how to produce processed images in both hard

(print) and soft (digital) format. They become competent computer users, learning about file management, input, and output. Because this course is designed to help students use digital imagery to develop themes from English and math classes, students will maintain a journal/sketch book as a working record throughout the course. They will present their final projects in a web-based digital portfolio. This is a three-credit college-level course which meets for three hours each week. Becuse of intensive computer use, extra time in open lab will be available for student project work. PREREQUISITE: STCC START students.

ARTS-215 — DIGITAL ARTS 3 credits
Individual student projects will be the focus of this course. Fundamentals of multimedia presentation will be taught, stressing use of the computer as a presentation tool. Designing in their chosen medium, students will create interactive autobiographies. Each student will formally present his/her work to classmates for discussion and critique. Self-confidence and self-reliance are stressed. PREREQUISITES: ENGL-100, ARTS-115

ARTS-240 — ART HISTORY: RENAISSANCE AND BAROQUE 3 credits
A survey course in the major visual art expressions of Western man, covering the Late Gothic period in painting; and the Renaissance, Baroque and Rococo art in Italy, Germany, France, Spain, Flanders, Holland, and England. Emphasis is placed upon understanding the impulse behind man's artistic expression and the link between the paintings, sculpture, and architecture of each area and the culture in which they were produced. Art History 1 is not a prerequisite. Three in-class hours weekly. Honors component available.

ARTS-242 — PAINTING 2 3 credits
Painting 2 is a continuation of Painting 1 offering the student the opportunity to explore a variety of media and techniques in painting. Students must explore a variety of spatial concepts used by the painter, working the problems presented as the course content into their own framework of artistic direction. PREREQUISITE: Painting 1 or permission of the instructor. Five in-class hours weekly.

ARTS-243 — PRINTMAKING 2 3 credits
A continuation of Printmaking 1 with more advanced problems in technique and color process. Emphasis is placed on the development of individual direction. Five in-class hours weekly. PREREQUISITE: Printmaking 1 or permission.

ARTS-246 — BASIC DESIGN 2 3 credits
A basic course intended to introduce the student to design and design principles, with a particular emphasis on color techniques, color theory, and the use and application of color in and for design. Six hours of lecture. PREREQUISITE: ARTS-146

ARTS-315 — 3D DESIGN 3 credits
A studio workshop course designed to introduce the students to basic concepts in three-dimensional design and sculpture. This couse is intended to provide the aesthetic and technical foundations needed to produce works of sculpture. Emphasis will be placed on problem-solving, planning, and constructing three-dimensional art in various materials while exploring traditional and non-traditional possibilities of visual expression through three-dimensional formats.

ARTS-346 — HISTORY OF MODERN ART 3 credits
An historical and analytical study of the major art movements in Europe and America during the late 19th and early 20th centuries. Detailed discussion and analysis of major artists and works of art from Romanticism to the present. This course will study

such artists as Goya and David through the impressionists and post-impressionists. The course will survey painting, sculpture, photography, and architecture of the late 19th and early 20th centuries.

ARTS-360 — EXPERIMENTAL COMPUTER IMAGING 1 4 credits
This lab/studio course integrates the computer into the creative process of image production. Students use the computer to produce transformations of digitized images of themselves. They learn to create abstract designs based on natural images, and construct whole images from pieces.

ARTS-460 — EXPERIMENTAL COMPUTER IMAGING 2 4 credits
Students will develop a portfolio of computer-generated images using techniques used in ARTS-360. PREREQUISITE: ARTS-360.

ARTS-902; ARTS-903; ARTS-905 — DIRECTED STUDY IN ART variable credit
Projects for advanced individual study by special arrangement with the instructor and approval of the Department and Division Chairpersons, the Academic Dean, and the Registrar. Students are expected to demonstrate willingness and ability to work on their own with minimal assistance.

Fire Protection and Safety Technology

(These courses are offered off campus, evenings only.)

FIRE-125— FIRE PROTECTION AND FIRE PREVENTION 4 credits
An introduction to fire science, with an emphasis on fire safety education, including prevention and protection. This course includes a historical survey of fire services, principles of flame and smoke spread, flammable liquids, gases, explosions, residential and industrial hazards. It also provides an overview of residential and commercial fire safety inspections, safety demonstrations, extinguishing techniques, and public and news media relations.

FIRE-210 — BUILDING CONSTRUCTION 3 credits
An exploration of building construction and design with emphasis on fire protection concerns, and review of statutory and suggested guidelines — local, state, and national. Required for graduation. PREREQUISITE: FIRE-120 or FIRE-125.

FIRE-220 — ORGANIZATION AND MANAGEMENT OF FIRE DEPTS. 3 credits
An exploration of organizational principles with emphasis on fire department organization; a study of the history, types, methods, and principles of fire department organization, both formal and informal, line and staff. Emphasis is placed on supervisory responsibilities and functions. PREREQUISITE: None

FIRE-310 — FIRE HYDRAULICS AND EQUIPMENT 3 credits
A course in incompressible fluids, including fluid properties, principles of fluid status, fluid flow system principles, pipe friction and heat loss, flow measurements, pumps, and other hydraulic devices and machinery. Applications are related to fire protection systems such as sprinklers, standpipes, hoses, nozzles, pumpers, and water supply systems. Demonstrations will illustrate and supplement the principles developed in the class. Required for graduation. PREREQUISITE: MATH-117.

FIRE-330 — FIRE PROTECTION SYSTEMS 3 credits
The detection and extinguishing systems of both automatic and manual types are studied, including sprinkler and standpipe systems, inert gases, foam and dry chemicals, temperature and smoke responsive devices, and alarm and signaling systems. Demonstration will illustrate and supplement the class work. Required for graduation. PREREQUISITE: FIRE-120 or FIRE-125.

FIRE-340 — FIRE OFFICERSHIP 3 credits
Fire department company officers play an important role in the coordination of the fire department's goals and objectives. In most instances, they are the people who ensure that action is taken to accomplish day-to-day tasks. This course focuses on the basic principles of fire department organization, leadership principles, working relationships, and personnel management. For the firefighter aspiring to become a company officer, or for a company officer wishing to improve management skills, this course will help develop and improve the necessary skills to effectively manage the fire company. PREREQUISITE: FIRE-110 or FIRE-125.

FIRE-410 — HAZARDOUS MATERIALS 3 credits
This course includes a review of basic chemistry, storage and handling of hazardous materials, laws, standards, and fire fighting practices within extreme fire hazard areas. Demonstrations will illustrate and supplement the class work. Required for graduation. PREREQUISITE: CHEM-101

FIRE-420— FIRE CAUSES AND DETECTION (ARSON 1) 3 credits
This course concerns the history, development, and philosophy of fire investigation and detection, including inspection techniques, gathering evidence, and development of technical reports, fundamentals of arson investigation, processing of criminal evidence, and criminal procedures related to various state and local statutes. PREREQUISITE: FIRE-120 or FIRE-125.

FIRE-430 — ADVANCED PROTECTION SYSTEMS 3 credits
This course is a continuation of FIRE-330 and is presented for those people interested in advanced fire control systems. Sprinklersystems will be given a great amount of attention in this course. PREREQUISITE: FIRE-330

FIRE-498 — ARSON 2 3 credits
A continuation of Fire Causes and Detection (Arson 1.) PREREQUISITE: FIRE-420

Foreign Languages

FRENCH

FREN-124 — ELEMENTARY FRENCH 1 3 credits
This introductory course is designed primarily for students who have had no previous experience with the language. Reading comprehension and mastery of the phonic patterns of the language are first objectives. Some basic grammar is introduced. Televised and semi-programmed materials help to accommodate the individual learning pattern and pace. Work with tapes is required. PREREQUISITE: None

FREN-224 — ELEMENTARY FRENCH 2 3 credits
This is a continuation of Elementary French 1. Using televised materials with an accompanying text, grammar is studied in context. The first objective of the course is the development of oral comprehension and conversational skill in a limited context. Work with tapes is required. PREREQUISITE: FREN-124 or two units of French at entrance.

ITALIAN

ITAL-127 - ELEMENTARY ITALIAN 1 3 credits
This is an introductory course for students with little or no previous background in Italian. Correct pronunciation of Italian sounds, basic listening comprehension, and speaking exercises along with basic grammar, vocabulary, reading, reading comprehension, and writing of simple sentences and a short paragraph are introduced in this course through lecture and multimedia format. The history, customs, traditions and culture of Italy will also be explored.

SPANISH

SPAN-121 — ELEMENTARY SPANISH 1 3 credits
This course introduces the student to the basic grammatical structure of the Spanish language, with emphasis on pronunciation and Latin American culture. Intense oral drills review vocabulary used in real life situations and cultural themes connected with the Hispanic world. A contrast between English and Spanish and the use of cognates Increases comprehension and vocabulary. PREREQUISITES: Clearance for Comp. 1 in the English Placement Test or permission of instructor.

SPAN-221 — ELEMENTARY SPANISH 2 3 credits
This is a continuation of Elementary Spanish 1, with emphasis on the four basic skills necessary for the mastery of a foreign language: listening, speaking, reading, and writing. More sophisticated grammatical and linguistic concepts are introduced and discussed, using the Spanish language as a tool for communication. Students gain knowledge of the contemporary thought of Hispanics in the United States and in the Hispanic world. Intense oral drills and practical vocabulary. PREREQUISITE: SPAN-121 or equivalent.

SPAN-321 — INTERMEDIATE SPANISH 1 3 credits
A review of grammar will be given in this course; oral drills and conversation receive special attention. The reading skills and basic writing are further developed. Spanish culture is emphasized. PREREQUISITE: SPAN-221

General Business
(*See* Business Administration)

Geology

GEOL-110 — ENVIRONMENTAL GEOLOGY 3 credits
The primary focus of this course is to introduce the student to the natural environment and the human interactions and everyday problems with the environment and the global community from a geological perspective. This course will introduce the student to the dynamics of how planet Earth works, explore how the relationship between human activities and natural systems may change planetary conditions, and evaluate the role that developing technologies play in maintaining and altering these planetary conditions. Topics covered will include environmental systems, population growth, water resources, waste issues, atmospheric issues, natural hazards, energy resources, and consumption. Three hours lecture.

Graphic Arts Technology

GRPH-122 — INTRODUCTION TO PREPRESS 3 credits
This lecture and lab course presents the various techniques, both traditional and electronic, of prepress preparation for printing. The lecture portion of the course will cover the specific requirements of image reproduction, including an overview of equipment, materials, software, and technique. The process of laying out a print job in the most efficient and economical configuration will be emphasized. In the lab portion, students will be introduced to traditional prepress techniques, including contacting, camera work, and film image assembly. Precision, calibration, and quality evaluation will be stressed. PREREQUISITE: None

GRPH-125 — TYPOGRAPHY AND LAYOUT 3 credits
This lecture and laboratory course is designed to introduce the student to the basic elements of type design and page layout. The lectures cover the history, terminology, specification, and aesthetics of type, as both text and design elements. The fundamentals of page layout will be covered with a focus on the effective visual presentation of type and images. In the lab the student will produce a variety of typographic and page layout projects using current professional page layout software. These projects will require the student to design effective visual solutions to communications problems, moving from concept development through the production of the completed design. Emphasis is placed on clean functional design. CO-REQUISITE: GRPH-125L

GRPH-131 — PRINTING TECHNOLOGY 3 credits
This basic course is designed to introduce students to the printing industry. The story of printing is told chronologically through a series of lectures that cover the first attempts at communication, through the development of mass communication systems, to a vision of what the world of printing might be like in the future. Assignments are designed to challenge the student's understanding of the purpose of mass communications through various printing processes in today's society. PREREQUISITE: ALGB-078 level or permission of instructor.

GRPH-145 — INTRODUCTION TO THE GRAPHIC ARTS COMPUTER 3 credits
This lecture and laboratory course will introduce students to the graphic arts computer, particularly the Macintosh. Students will learn basic computer functions used in all graphic arts applications, such as mouse skills, reading and selecting from the menus, graphic user interface, disk and filing operations, and printing files. Students will become familiar with today's popular graphics software, such as word processing, desktop publishing, drawing and painting, and photo manipulation. The class will receive individualized instruction in the laboratory groups. PREREQUISITE: None.

GRPH-170 — INTRODUCTION TO DIGITAL PHOTOGRAPHY 3 credits
This course is designed as an introduction in the use of a point and shoot digital camera as well as the more advanced single lens reflex models. The course is designed for those who are too intimidated to read the owners manual and would like to have the features and procedures associated with their camera explained and demonstrated. This couse will also benefit those who have yet to decide what type of digital camera to purchase or to upgrade to a more advanced model. In addition to lectures and demonstrations, students will have hands-on experience using supplied digital cameras and computer work stations that will show them how to record, store, email, and reproduce their digital images. While there are no prerequisites for this course, a basic understanding of computer use would be helpful.

Offered evenings only

GRPH-180 — PROFESSIONAL DIGITAL PHOTOGRAPHY 3 credits
This course is an introduction to photographic processes that use computer-based technologies. Students will learn the basics of image capture with both conventional and digital cameras. From there they will explore the world of digital image processing, including electronic scanning of both reflective and transparent materials, using Adobe Photoshop software to prepare and modify the images, and outputting black & white and color prints. Lecture three hours.

GRPH-200 — WEBSITE DESIGN AND DEVELOPMENT 3 credits
This lecture and laboratory course is designed to introduce the concepts of the world wide website design and development. Students will learn the basics of HTML programming to create a home page that incorporates graphic, textural, and aesthetic perspectives. Each student will design a home page as part of the course. The present and future status of the world wide web will be discussed. Basic computer skills are required. PREREQUISITE: GRPH-145, CMPA-196, or permission of instructor.

GRPH-201— INTERACTIVE MEDIA DESIGN 3 credits
This course is a continuation of GRPH-200 and will introduce the student to interactive multimedia techniques for the Internet. Using a wide range of software for media design and Rich Media creation (audio and animation-enhanced interactivity), the student will learn to produce dynamic interactive web pages. The course will focus primarily on the use of Flash and Dreamweaver software programs. Included are such topics as advanced compression technologies including video and audio compression, nonlinear narrative, navigational interface design, and delivery for the world wide web. Two hours of lecture. PREREQUISITE: GRPH-200

GRPH-222 — IMAGE ASSEMBLY 3 credits
This lecture and laboratory course presents the techniques involved in the assembly of images for printing. The lecture part of the course will take the student from traditional film assembly techniques to electronic prepress, including such topics as press and bindery requirements, layout and imposition, color separation, trapping, platesetting, pre-flighting, and the various file formats. The laboratory part of the course will be project-based and progress from advanced film image assembly into electronic image assembly, including the assembly of complex multiple color, multiple page publications, proofing, and imagesetting. PREREQUISITE: GRPH-122

GRPH-280 —ADVANCED DIGITAL PHOTOGRAPHY 3 credits
This course is a continuation of GRPH-180 which uses computer-based technologies to record and output photographic images. The student will learn advanced techniques in image capture with digital cameras. Students will continue to explore the world of digital image processing using Adobe Photoshop software to prepare and

modify images. Projects will include studio portraits, product photographs, macro photographs, black and white conversion, and color printing, with the emphasis on quality output. PREREQUISITE: GRPH-180; CO-REQUISITE: GRPH-280L

GRPH-281 — ADVERTISING PHOTOGRAPHY 3 credits
This is an advanced digital photography course requiring students to produce images that command the viewer's attention. The students will develop strong artistic and technical visual problem-solving abilities, primarily in a studio environment. Product photography, fashion photography, and food photography will be emphasized. Additional emphasis will be on client communication, professional business practices, and publication design. The students will produce an advertising publication using their own photographic and graphic design skills. Critiques are held to provide the students feedback for their work. PREREQUISITE: GRPH-280 or permission of instructor. CO-REQUISITE: GRPH-281L.

GRPH-282 — PROFESSIONAL DIGITAL IMAGING TECHNIQUES 3 credits
This is an advanced digital imaging course focusing on digital image manipulation using Adobe Photoshop. The course will teach students how to professionally modify their digital images to address specific imaging problems, including distortion and perspective correction and control, processing of RAW digital images, advanced defringing and retouching techniques, advanced image compositing and stitching techniques, high quality inkjet color and grayscale printing techniques, as well as other topics. Students will be given a series of projects that will incorporate the learned techniques. PREREQUISITE: GRPH-280 or permission of the instructor. CO-REQUISITE: GRPH-282L.

GRPH-283 — PHOTOGRAPHIC ILLUSTRATION 3 credits
This is an advanced digital photography course allowing students to express themselves through photography. The student will develop strong artistic and advanced digital image compositing skills. Fine art photography, still life photography, and photojournalism will be emphasized. Students will become skilled at electronic set building and location photography. They will produce a series of projects, including some that will be self-directed. Additionally, students will be encouraged to study and create innovative photographic techniques. Critiques are held to provide the students feedback for their work. PREREQUISITE: GRPH-280 or permission of instructor; CO-REQUISITE: GRPH-283L.

GRPH-323 — PREFLIGHTING AND TRAPPING 3 credits
This is a lecture and lab course in which the most important elements of electronic prepress are discussed and practiced. Subjects included are the layout and positioning of images for printing, digital image assembly systems, image trapping, and preflighting jobs. Students will learn these skills on professional-level software such as Quark XPress, Adobe Illustrator and Photoshop, and Luminus Trapwise and Presswise. PREREQUISITE: GRPH-145.

Offered evenings only

GRPH-360 — OFFSET PRESSWORK 3 credits
This course will familiarize the student with the theory and operation of the offset lithographic printing press. The technical components of these presses will be detailed emphasizing the advantages and limitations of the process, enabling the student to maximize and enhance his or her design capabilities. Printing substrates will be presented in detail along with color matching systems. Laboratory exercises will familiarize the student with the operation of small offset duplicators and larger offset presses. PREREQUISITE: GRPH-131.

GRPH-397 — GRAPHIC ARTS COOPERATIVE EDUCATION 3 credits
Graphic Arts Cooperative Education is a course which enables students to achieve work experience in assignments which are directly related to their major field of study. It provides valuable first-hand experience in the field, wages earned to defray most college expenses, and work experience to give participating students "paid experience" references for future employment opportunities. PREREQUISITES: Senior Standing; GRPH-122, GRPH-125, GRPH-131, GRPH-462.

GRPH-420 — COLOR REPRODUCTION PROCESSES 3 credits
This course is devoted exclusively to the reproduction of color images. The course begins by exploring some of the many fascinating aspects of color, including the nature of light and color perception. From there, the course will delve into the world of color measurement and specification, including a look at the various color spaces such as the Munsell and CIELAB. Topics covered will also include color printing characteristics, color standardization, hi-fi color, color proofing, and color management. The labs will be a combination of demonstrations and hands-on experiences including colorimetry, color evaluation, color scanning, image setting, and proofing. The aim of this course is to develop the skills required of graphic arts professionals to make critical and accurate color judgments. Lecture: two hours. PREREQUISITE: GRPH-131; CO-REQUISITE: GRPH-420L

GRPH-422 — COLOR MANAGEMENT 3 credits
In this course the student will learn the basic techniques for setting up and evaluating the quality of a prepress system. The calibration of a closed feedback loop will be the heart of the course, with special emphasis on color management techniques. The course will use CIE-based color models as the foundation for color specification and tolerancing. Students will learn techniques for ensuring that the final printed output of printed materials is predictable, and match the requirements of the job. Also covered will be such topics as dot shape, screen frequency, screen angles, moiré output resolution, and stochastic imaging. PREREQUISITE: GRPH-420 or permission of instructor.

GRPH-425 — COLOR REPRODUCTION 4 credits
As full color printing is now the standard rather than the exception it is very important that today's graphic arts professional have a good theoretical and practical understanding of the process involved. This lecture and laboratory course will cover the subject of color reproduction in graphic printing processes. The course will begin with a review of light and color, and proceed with such topics as color perception, color measurement and evaluation, color standardization, color printing characteristics, ink, color separation techniques, hi-fi color, and color proofing processes. The course will emphasize color management as a tool for maintaining precise color quality standards. PREREQUISITE: GRPH-131

GRPH-445 — GRAPHIC ARTS PORTFOLIO WORKSHOP 3 credits
This is a portfolio workshop in which students utilize the advanced technical skills that they acquired in previous Graphic Arts Technology courses. Students will be introduced to various graphic arts and multimedia software programs. The course will emphasize the development of subject matter, design techniques, and execution of audio-visual elements. Along with a resume detailing their technical and creative skills, the students will be required to produce several complex and involved projects. The primary focus of the course will be to develop a multimedia portfolio, which demonstrates the student's proficiency in various software applications. This portfolio can be used for future academic or professional employment presentations. PREREQUISITES: GRPH-462, GRPH-463; CO-REQUISITE: GRPH-445L

GRPH-455 — MACINTOSH OPERATING SYSTEMS 3 credits
Since the Apple Macintosh computer has become a staple "tool" for electronic prepress, learning proper operating procedures and maintenance is essential for all Graphic Arts Technology students. This hands-on lecture course explores system software basics through custom configuration, including disk and hard disk management, menus and hierarchies, System Folder and Finder, microprocessors and memory, loading and updating software, font storage, file formats, multitasking, third party utilities and extension conflicts, interfacing and inter-application communication, emulation, file sharing and networking, connecting peripherals, troubleshooting, and compatibility of popular software and hardware used in today's printing industry. PREREQUISITES: GRPH-125, GRPH-145 or CMPA-196 or permission of instructor.

GRPH-461 — ELECTRONIC PUBLICATION 3 credits
This lecture and laboratory course covers the computer preparation of graphic elements for publication. In the lecture part of the course the topics of publication planning and organization, imaging requirements, color, and applications software will be discussed. An emphasis will be placed on how the finished job will look. The laboratory part of the course will be made up of a series of progressively more complex exercises designed to develop the student's skills on specific page layout software such as QuarkXpress. Each student will design and produce a series of projects for this course. PREREQUISITE: GRPH-125.

GRPH-462 — DIGITAL IMAGING PREPARATION 3 credits
This lecture and laboratory course covers the computer preparation of visual images for publication. The lecture part of the course will deal with such topics as scanning, image manipulation, and output requirements. A focus will be on the aesthetics of visual images. The laboratory part of the course will deal with the development of advanced skills using digital imaging programs such as Adobe Photoshop. Each student will produce a series of projects for this course to demonstrate his or her proficiency in digital image preparation. PREREQUISITE: GRPH-145.

GRPH-463 — DIGITAL ILLUSTRATION TECHNIQUES 3 credits
This lecture and laboratory course covers the rendering of images for illustration. Students will learn the techniques of drawing with a computer. In the lecture part of the course, the topics discussed will include visual composition, form, space, perspective, color, and a bit of modern art history, as well as Postscript and EPS formats. The laboratory portion of the course will focus on exercises and projects using the Adobe illustrator vector-based drawing program and the Adobe Acrobat PDF program. PREREQUISITE: GRPH-145

GRPH-464 — ADVANCED DIGITAL IMAGE PREPARATION 3 credits
This lecture and laboratory course is an advanced course in the techniques of image preparation using Adobe Photoshop software. In this course the student will expand upon the technical skills learned in GRPH-462 Digital Imaging Preparation such as image selection, image improvisation, image manipulation, and retouching. Each student will be required to produce a series of projects in order to demonstrate proficiency in the use of this software. PREREQUISITE: GRPH-462.

GRPH-491 — PHOTOGRAPHY AND THE DIGITAL DARKROOM 3 credits
This course is an introduction to photography that uses both conventional and computer-based technologies. It also covers the history and aesthetics of photography. The student will learn conventional black and white film processing and the photographic printing processes, including exposure/development theory. In addition, the student will learn how to scan both reflective and transparent originals and use Adobe

Photoshop software for image processing and output (in both black and white and color). Students will be given a variety of picture-taking assignments to develop their composition and perspective skills, and to promote creativity. Critiques are held to provide students with feedback regarding their work. Professional mounting and presentation techniques will also be demonstrated.

GRPH-497 — GRAPHIC ARTS COOPERATIVE EDUCATION 3 credits
Graphic Arts Cooperative Education is a course which enables students to achieve work experience in assignments which are directly related to their major field of study. It provides valuable first-hand experience in the field, wages earned to defray most college expenses, and work experience to give participating students "paid experience" reference for future employment opportunities. PREREQUISITES: Senior Standing; GRPH-122, GRPH-125, and GRPH-462.

History

(See Social Sciences)

Honors Colloquia

HONR-502 — PHILOSOPHY OF SCIENCE COLLOQUIUM 3 credits
The science colloquium will focus on historical trends in science, great thinkers in the world of science, and science and technology in the modern age. Supplementary sources such as *The Ascent of Man, Connections,* Carl Sagan, and *Nova* may be used. An integral component of this colloquium will be logic, critical thinking, analytical thinking, and data collection and analysis. Students will be encouraged to become involved in their own original research projects. PREREQUISITE: Acceptance into Honors program.

HONR-503 — LIBRARY RESEARCH COLLOQUIUM 3 credits
Honors students will explore print, non-print, and electronic sources while seeking the best information on selected topics. Information literacy, evaluation skills, and research methods are covered. The organization of information, and discovering what is (and is not) found in libraries is addressed. Team and individual projects include treasure hunts, journals, oral presentation, and written assignments. Curiosity, persistence, and a sense of humor are prerequisites. PREREQUISITE: Acceptance into Honors program.

HONR-504 — HUMANITIES COLLOQUIUM: ARTS IN ACTION 3 credits
The Arts in Action colloquium is designed to illustrate to the student how the arts contribute actively to our daily lives, how they give us a sense of our past, how they provide us with an enlightened sense of self, and how they enable us to understand the ongoing complexities of the human condition. This colloquium may focus on such areas as theater, music, dance, painting, and sculpture. Three hours lecture.
PREREQUISITE: Acceptance into Honors program.

HONR-505 — THE WEST IN THE 20TH CENTURY 3 credits
After a brief review of the West in the 19th century, the course will examine some factors that shaped the 20th century. Industrialization and technology, the emergence of mass society and culture, warfare and the modern nation state, and the western world after World War II will be the primary areas of analysis in a seminar format. This is a course to be taken for Honors. It is open to all in the Honors program and by

permission for those students with a B average or better. All enrollees must have taken one of the following: HIST-100, HIST-200, HIST-110, or HIST-210. PREREQUISITE: Acceptance into Honors program.

HONR-506 — SOCIAL SCIENCE COLLOQUIUM: AMERICAN BIOGRAPHIES 3 credits

This is an interdisciplinary social science course with a historical and biographical focus. "Modern" is defined as circa 1815 to the present. We will study the famous, infamous, and obscure. Women and men from the American experience will play a central role, but not to the exclusion of pivotal figures from around the globe. Political matters often dominate, yet social, intellectual and cultural aspects – both elite and popular – will also receive due attention. PREREQUISITE: Acceptance into Honors program.

HONR-507 — FROM SIDE STREETS TO SKYSCRAPERS: LITERATURE AND THE CITY 3 credits

From the world of subways and skyscrapers, opportunities and outcasts, bright lights and dark alleys, come the varied voices of city literature. This honors course will examine images of the city in a variety of literary works, including poetry, short fiction, novels, and plays. We will explore concepts including the ways in which the city setting serves as a metaphor for its inhabitants, their struggles, and their successes. We will also explore how literature of the city, both past and present, confronts the unique experiences of, for example, the homeless, the unemployed, women, immigrants, and African-Americans. Students will be encouraged to participate in class discussions and will be required to write a variety of short responses and analytical essays on reading selections. As a final project for the course, students will write and present to the class a personal narrative about some aspect of a city that is significant in their lives, preferably Springfield, Holyoke, Chicopee, Worcester, Westfield, or some other area city that gives it its unique character and that connects to their own lives. Three hours lecture. PREREQUISITE: ENGL-100, Acceptance into Honors program.

HONR-508 - HUMANITIES COLLOQUIUM:THE COMIC SPIRIT 3 credits

The Comic Spirit: Perspectives on Humor and Laughter, an Honors prorgam seminar, offers students a broad-based inquiry into the related concepts of comedy, humor, and laughter. It approaches these subjects from a mostly literary (and mostly Western) perspective with close study of comic drama and fiction, but the course will also consider film and television, cartoons, philosophy, psychology, sociology, and the physiology of laughter. The goal of the course is to help students reach fuller and more complete answers to the questions: What is humor? What makes people laugh? What makes something funny? Who decides? Three hours lecture. PREREQUISITE: Admission into Honors program, ENGL-100, ENGL-200.

HONR-509 — ENTREPRENEURSHIP: CONCEPT TO COMMERCIALIZATION 3 credits

This Honors course provides direct theoretical and practical expertise in invention, innovation, and entrepreneurship. It will utilize the E-Team concept to promote, enhance, and support innovation through the use of guest speakers, workshops, lectures, field trips, laboratory experiments, professional advice, and group dynamics. E-Teams will be comprised of students from a variety of disciplines that include business and technologies. Student projects, centered on real-life designs and ideas, will be discussed and evaluated by E-Teams. Emphasis is given to the students' creativity and ingenuity, culminating in a marketable innovation. Areas of special interest are safety, adaptive (universal) design, comprehensive application, flexibility, and environmental impact. Visits to area businesses may also be a part of this course. PREREQUISITE: permission of department chair.

Humanities
(*See* English, Fine Arts, Foreign Languages, Music, Philosophy)

Information Technologies

CMPA-100 — COMPUTERS, WINDOWS AND EMAIL *(5 weeks)* 1 credit
This elective course introduces computer novices and/or beginning students to the features and functionality of 1) computer hardware and computer literacy, 2) Microsoft Windows and email. Email will be used to link students with classmates, faculty, and the world wide web. Upon completion, students will be prepared for immediate and successful productivity in other courses utilizing computer technology. Note: It is highly recommended that beginners take CMPA-100 and OFFS-100 prior to enrolling in other computer courses. Three hours lecture.

CMPA-101 — INTRODUCTION TO WORD PROCESSING 1 credit
This course is an introduction to basic word processing concepts using the latest software. Students will complete assignments using basic formatting techniques, enhancing documents, working with basic writing tools, using timesaving features, and working with tables. PREREQUISITE: OFFS-100 or touch keyboarding rate of 20 wpm

CMPA-102 — WORD PROCESSING 3 credits
Students will create and edit various documents. The student will be introduced to basic word processing concepts such as applying character effects, finding/replacing text, creating headers/footers, moving text, creating envelopes/labels, and changing fonts, alignments, page numbering. Managing files, creating tables, and inserting graphics will also be introduced. Successful completion of the course will prepare the student for Microsoft Office Specialist certification in MS Word (Core Level.)

CMPA-105 — INTRODUCTION TO EXCEL 1 credit
This course introduces the student to the fundamentals of electronic spreadsheet software in the Windows environment. Small spreadsheets are created, saved, and edited. The student will work with formulas and will learn how to enhance the appearance of spreadsheets and create a variety of business charts. COREQUISITE: OFFS-100

CMPA-107 — INTRO. TO QUICKBOOKS 2 credits
This course introduces the initial setup of a company utilizing Quickbooks accounting software, including the maintenance of Chart of Accounts, customer and vendor accounts, as well as inventory items. Recording of daily transactions such as invoicing, cash receipts, cash payments, and other common business transactions are addressed. The preparation of a variety of financial reports is also introduced. Both service and merchandising businesses are examined. Lecture two hours. PREREQUISITE: 20 wpm.

CMPA-109 — EXCEL 3 credits
Students will create and format worksheets in MS Excel. The student will be introduced to basic worksheet concepts such as applying font styles, setting margins, and modifying cell contents, inputting formulas/functions, and creating various charts.

Successful completion of the course will prepare the student for Microsoft Office Specialist certification in MS Excel (Core Level.) Lecture three hours. PREREQUISITE: 20 wpm.

CMPA-110 — INTRODUCTION TO ACCESS 1 credit
This course introduces the student to the fundamentals of database software in the Windows environment. The student will learn how to specify and create a database, how to search it for specified information, and how to create screen forms and/or printed reports from that data. COREQUISITE: OFFS-100

CMPA-111 —ACCESS 3 credits
In this course, students will learn to create a database table and create relationships between database tables. Students will create forms, reports, mailing labels and charts. Students will also gain experience in using database wizards and office links, performing queries, and filtering records. Successful completion of the course will prepare the student for Microsoft Office Specialist certification in MS Access (Core Level.) Three hours of lecture. PREREQUISITE: 20 wpm.

CMPA-115 — INTRODUCTION TO THE INTERNET 1 credit
This course introduces the student to the fundamentals of "navigating" the Internet. Students will be introduced to the tools available to get to and retrieve information. COREQUISITE: OFFS-100.

CMPA-116 — DATA ENTRY KEYBOARDING 3 credits
This course is designed for any individual wishing to develop touch keyboarding skills when entering alphabetic and numeric data on the personal computer. The student will be provided with projects designed to build speed and accuracy on both straight copy and business forms. A minimum touch keyboarding rate of 25 words per minute is required for course completion. Available to the entire STCC community. Three hours lecture.

CMPA-120 — INTRODUCTION TO POWERPOINT 1 credit
This course will introduce the student to techniques for using Microsoft PowerPoint to enhance presentation and public speaking skills. Students will learn to plan and create presentations, format and enhance presentations, and deliver dynamic and compelling on-screen presentations. PREREQUISITE: OFFS-100 or touch keyboarding speed of 25 wpm

CMPA-121 — POWERPOINT APPLICATIONS 2 credits
Students will create various presentations using Microsoft PowerPoint. The student will be introduced to many features to enhance the appearance of slides by changing the slide design and color scheme and adding animation and sound. Advanced PowerPoint features will be presented, such as customizing clip art images, creating and enhancing charts, adding custom backgrounds, using design templates, and designing a custom show. Students will be required to create an original slide presentation. Successful completion of the course will prepare the student for Microsoft Office Specialist certification in MS PowerPoint (Core Level.) Two hours lecture. PREREQUISITE: 20 wpm.

CMPA-125 — INTRODUCTION TO INTEGRATION 1 credit
Students will learn to link and embed objects/data via integrating one application program with another such as word processing, worksheets, databases, and presentations. The completion of several integrated activities will be required for course completion. PREREQUISITES: CMPA-101, CMPA-105, and CMPA-110 or CMPA103 or PROG-109.

COMPUTER INFORMATION TECHNOLOGIES

CMPA-098 — INTRODUCTION TO COMPUTERS 3 credits
This course is intended for developmental students. It gives practical experience in using computers. Students use easy-to-learn, non-complicated software such as a word processor, a paint program, a calculator, and a simple file manager. Students learn to work in the Windows operating environment, using exercises designed to enhance the English and math skills they need to practice. This is a developmental course. Credit for this course will not be counted toward fulfilling graduation requirements at STCC. PREREQUISITE: Placement at DWRT-099 level.

WEBS-100 — INTERNET CERTIFICATION 3 credits
This course will teach fundamentals of Internet technologies and prepare students for the Internet Certification exam. The course will provide students with an overview of the concepts and technologies related to the Internet. This course will help to develop student understanding of: utilization of the Internet to promote business goals (e-commerce); website content, design, and information architecture (HTML); programming for the Internet; Internet access; Internet infrastructure and networking; Internet security; Internet connectivity and clients (ISDN, dial-up leased lines, setting up clients); troubleshooting operating systems; browsers; servers; and TCP/IP problems that relate to the Internet. Three hours of lecture. PREREQUISITES: ALGB-097, DWRT-099; CO-REQUISITE: ENGL-100.

PROG-102 — RPG 4 credits
This course will teach the fundamentals of RPG using a problem-oriented, hands-on approach. Students are introduced to programming concepts and techniques by a series of programs illustrating typical business applications. Heavy emphasis is placed on lab work where the student will enter, compile, and execute assigned programs using the STCC IBM AS/400 computer. PREREQUISITE: None.

CMPA-103 — MICROCOMPUTER APPLICATIONS FOR WINDOWS 3 credits
This course provides an introduction to three powerful microcomputer applications, and begins with an overview of Windows. After a brief exploration of this operating system, the student is introduced to Windows-based software applications in three categories: database management systems, spreadsheets, and word processors. This course prepares the student for more advanced courses in these application areas. PREREQUISITE: OFFS-100, familiarity with a keyboard, or permission of instructor

PROG-106 — INTRO. TO STRUCTURED PROGRAMMING USING C 4 credits
This is an introductory course for computer programming. Students are expected to design, code, debug, test, and document programs using the C language within the C++ environment, beginning with short and simple applications and continuing with those of increasing complexity. Concepts such as variables, constants, data types, and all decision and iteration structures will be introduced and used throughout the course. Also included are more complex subjects such as scope, string manipulations, sequential file access, subprograms with parameters, as well as arrays. PREREQUISITES: completion of DWRT-099 or placement at ENGL-100, and completion of ALGB-083 or placement at ALGB-091, and completion of DRDG-092 or placement at ENGL-100. Please note: A lab is required with this course. Three hours of lecture. CO-REQUISITE: PROG-106L.

PROG-109 — INFORMATION SYSTEMS FUNDAMENTALS 3 credits
This course provides a foundation for all Information Technologies majors in develop-

ing an awareness of the vital need businesses and institutions have for instituting and managing efficient and effective systems to handle today's information requirements. A major component of the course is to increase critical thinking skills by identifying and solving typical information problems. Three hours of lecture. PREREQUISITE: ENGL-100, and ALGB-091.

PROG-120 — INTRODUCTION TO COMPUTER APPLICATIONS IN TELECOMMUNICATIONS 3 credits

An introductory course in the basic computer orientation and implementation of hardware and software applications in telecommunications. Students will use various software packages to create documents, spreadsheets, graphs, databases, and presentations. The student will utilize this knowledge to solve problems and transfer information via electronic medium. Lectures, interactive learning, and demonstrations will be employed. Laboratory exercises will be required. PREREQUISITE: acceptance in the Verizon Next Step program.

PROG-130 — BASIC COMPUTER MAINTENANCE 3 credits

This is an introductory course for people interested in PC-based computer systems. The objective of the course is to provide an introduction to the fundamental concepts of PC use in business and industry. The course starts with an overview of basic PC operating systems and moves into hardware, software, and then networking. A large part of each session will be hands-on, covering basics of computer maintenance and repair. Three hours of lecture. PREREQUISITES: completion of DWRT-099 and ALGB-093.

PROG-140— COMPUTER MAINTENANCE 1 3 credits

This is the first of a two-course series. This is a current and comprehensive course on configuring, diagnosing, and repairing microcomputers and associated technologies. (PC compatible units are included in this course.) Topics covered include: how computers work, how software and hardware work together, the systems board, understanding and managing memory, floppy disk and hard disk drives, installing and supporting disk drives, troubleshooting fundamentals, supporting I/O devices, and multimedia technology. Completion of this course and PROG-240 will assist the student in preparing to pass the A+ certification exams and succeed in the PC repair industry. Labs follow lectures, where students get the hands-on experience needed to train for the field of PC repair. The labs are designed to merge the lectures and lab experiences for maximum understanding in a dynamic environment. No electronic experience is assumed or required. Three hours of lecture. PREREQUISITE: completion of DWRT-099 or placement at ENGL-100, and completion of ALGB-083 or placement at ALGB-091.

CMPA-196 — COMPUTER CONCEPTS FOR THE ARTS AND SCIENCES 3 credits

This course is designed for the student in a liberal arts program. Topics covered will include a fundamental understanding of computer hardware (input, output, processing, and storage), and software (systems, applications, and productivity); a practical study of common productivity software (word processing, spreadsheet, data base and graphics); and an understanding of the implications and effects of computers in our social order. PREREQUISITE: ENGL-100 concurrent or completed, or permission of instructor.

CMPA-197 —TECHNOLOGY IN EDUCATION 3 credits

This is an introductory course in computers and computing that is designed for students preparing for a career in teaching. The course is designed to give students a fundamental understanding of computer hardware, systems software, and productivity software. Recurring and current topics relating to computing in the field of education

will be discussed. The course will also give students the ability to use the computer to prepare reports and materials that are appropriate for personal or classroom use. Three hours of lecture. PREREQUISITE: ENGL-100; CO-REQUISITE: LIBR-101 Restricted to EDUC.AA majors.

CMPA-201 — MICROCOMPUTER APPLICATIONS 2 3 credits
This course explores advanced topics in microcomputer applications for Windows using an integrated software package that includes presentation graphics, word processing, a spreadsheet and a database management system. The focus of the course is on the integration of these applications (file conversion, linking, embedding) while using some of the more advanced features of the software and introducing some new packages such as presentation graphics. PREREQUISITE: CMPA-103 or PROG-109.

CMPA-202 — ADVANCED WORD PROCESSING 3 credits
This course is a continuation of Word Processing (CMPA-102.) The student will be introduced to the advanced features of word processing such as paragraph shading and sorting; creating page borders, bookmarks, styles, footnotes/endnotes; using tables and mail merge; customizing toolbars; and creating macros and forms. Successful completion of this course will prepare the student for Microsoft Office Specialist certification in MS Word (Expert Level.) Three hours of lecture. PREREQUISITE: CMPA-102.

PROG-202 — ADVANCED RPG 4 credits
This course is a continuation of PROG-102. Interactive processing, screen format design, and screen design aid will be utilized by the students to complete assigned programming problems. Random record retrieval using keyed files (ISAM), indexed file updating, and RPG structured programming is a partial list of topics to be included in the curriculum. Programming assignments will be compiled and executed on the STCC IBM AS/400 computer. PREREQUISITE: PROG-102.

PROG-208 — VISUAL BASIC.NET 1 4 credits
The student will gain a working knowledge of the Visual Basic.NET Integrated Development Environment (IDE). Use of industry coding standards will be required, and students will use the standards for all programming assignments. The student will learn to use common NET controls such as the label, textbox, button, radio button, checkbox, list box, combo box, and main menu. Utilization of the Visual Studio.NET debugger as a means to produce quality applications will be covered throughout the semester. Data validation will be stressed as the method to enforce the business rules. The ArrayList and HashTable data structures will be covered as will the VB.NET Imports directive. Three hours lecture.
PREREQUISITE: PROG-106; CO-REQUISITE: PROG-208L.

CMPA-210 — COMPUTER-MEDIATED COMMUNICATION FOR THE GLOBAL VILLAGE 3 credits
The Internet has made it possible to bring diverse people together across many boundaries with new ways of communicating. This is an interdisciplinary course designed to provide the student with the basic theory, terminology, and practical application of computer-mediated communications (CMC)while exploring global diversity. Individualization of courseware will be accomplished as each student applies the techniques and concepts to his or her respective major and interests. Three hours of lecture. PREREQUISITE: ENGL-100.

CMPA-240 — EXCEL/ACCESS APPLICATIONS 3 credits
This course will introduce the student to the advanced features of MS Excel and MS Access. Students will enhance worksheets, integrate spreadsheets and databases, enhance forms with sub forms, create application systems using macros and wizards, customize forms, and learn how to administer a database. Successful completion of the course will prepare the student for Microsoft Office Specialist certification in MS Excel (Expert Level) and MS Access (Core Level.) Three hours of lecture. PREREQUISITES: CMPA-109, CMPA-111.

PROG-240 — COMPUTER MAINTENANCE 2 3 credits
This is the second of a two-course series. This is a current and comprehensive course on installing, upgrading, and maintaining microcomputers and associated technologies. (PC-compatible units are used in this course.) Topics covered include: electricity and power supplies; supporting Windows 9x, Windows NT workstation, Windows 2000 professional; purchasing or building your own PC; communicating over phone lines; network fundamentals and the Internet; printers and notebook computers; viruses; disaster recovery; and maintenance planning and the professional technician. Completion of this course and PROG-140 will assist the student in preparing to pass the A+ certification and to succeed in the PC repair industry. Labs follow lectures, where students get the hands-on experience needed to train for the field of PC repair. The labs are designed to merge the lectures and lab experiences for maximum understanding in a dynamic environment. Three hours of lecture. PREREQUISITE: PROG-140.

PROG-302 — COBOL 1 4 credits
COBOL is a procedural-type language which continues to be the most popular language for solving business problems. The course emphasizes structured programming techniques with its concentration on program design and program readability. The student will write and test a number of programs. PREREQUISITE: PROG-106 or PROG-203 or PROG-102.

PROG-308 — VISUAL BASIC.NET 2 4 credits
This course will build upon the skills developed within the PROG-208 course. The focus will be on developing "bullet-proof" application programs using Visual Basic.NET. Object-oriented development techniques will be stressed, and their own functional business objects using VB.NET. Use of industry coding standards and structured exception handling will be required for all student-developed programs. ADO.NET will be used as a means of retrieving and updating data residing within an SQL Server database. The use of NET Server Explorer and SQL Server Enterprise Manager will be covered. Use of the data grid control will be examined. The reading of XML files will be discussed, as will the use of Crystal Reports. Three hours lecture. PREREQUISITE: PROG-208; CO-REQUISITE: PROG-308L.

PROG-313 — WINDOWS OPERATING SYSTEMS 3 credits
This course introduces the concepts and functions of modern computer operating systems. Emphasis will be placed on those microcomputer operating systems which have full multi-tasking capabilities and/or which provide a graphical user interface. Approximately one half of the scheduled class time will be spent in a lab environment using the operating systems. PREREQUISITE: PROG-109

PROG-314 — DATABASE SYSTEMS 3 credits
The goals of this course are to become knowledgeable in the theory, design, development, and information retrieval of computerized databases. Database theory and design will include the normalization (first, second, and third normal forms) of data as well as development methodologies. The database design and information retrieval compo-

nents will be developed using relational database software (including Structured Query Language [SQL]) on microcomputers. The database will be used for developing tables, forms, queries, relationships, reports, and switchboards. PREREQUISITE: PROG-109

PROG-315 — ADVANCED SPREADSHEETS 3 credits
This course will cover advanced work in developing realistic and useful spreadsheets. The assignments will use currently popular spreadsheet software packages. Topics will include functions, graphs, table look-up, goal-seeking, and statistical functions. PREREQUISITE: PROG-109 or CMPA-103.

CMPA-320 — DESKTOP PUBLISHING 3 credits
A comprehensive introduction to a powerful page composition program such as PageMaker. The student will have use of a microcomputer system and receive hands-on experience. The course will be heavily project-oriented. The student will be guided into producing increasingly complex publications, thus experiencing a variety of techniques and achieving self-sufficiency. Hardware and software concepts as well as terminology associated with desktop publishing will also be included in this course. PREREQUISITE: Familiarity with any word processor, CMPA-102 or CMPA-103 or permission of instructor.

WEBS-324 — WEB AUTHORING 4 credits
This course focuses on the advanced features of web authoring: incorporating frames and enhanced layout, designing user input forms, uploading web pages, multimedia and creating image maps. Web scripting will be introduced. Commercial packages for web page design will be discussed and used in this course. A lab is required with this course. PREREQUISITE: WEBS-100.

PROG-325 — UNIX OPERATING SYSTEM 3 credits
This course will cover the Linux/Unix operating system. Theory behind the Linux/Unix family of operating systems is covered, as is operating system installation. Features and tools of Linux will be discussed along with some of the technical aspects of the O/S. The hands-on component will give the students exposure to Linux and many of the commands and tools. Students will learn operating system management and troubleshooting. Other miscellaneous features will be taught in the hands-on environment. PREREQUISITE: PROG-109.

WEBS-326 — WEBSITE MANAGEMENT WITH DATABASE INTEGRATION 4 credits
Participants in this course will gain knowledge and skills essential to the strategic management of websites and the integration of websites with a database. Course topics include planning and structuring websites for future growth and ease of maintenance, website security, webserver hardware and software, and website registration, promotion, and traffic monitoring. Students will be provided with opportunities to make website management decisions throughout the course. PREREQUISITE: GRPH-200

WEBS-328 — WEB SCRIPTING 3 credits
This course will provide students with experience in one or more scripting languages (Javascript, CGI, Vbscript, ASP), enabling them to add interactivity to web pages and to specify communication between the server and a web page. The student will be learning the mechanics involved in building dynamic and interactive web pages. PREREQUISITE: WEBS-324.

PROG-350 — INTERNET/NETWORK SECURITY 1 3 credits
This course will teach the students about data protection and threats. The students will learn about operating system protection, network protection, and desktop protection techniques. The student will learn about the many threats to a network and how to

protect against those threats. Students will use hands-on tools that hackers use, to gain an understanding of the various vulnerabilities that exist. Three hours lecture. PREREQUISITES: PROG-313 or PROG-325, and PROG-412.

PROG-360 — ADVANCED UNIX OPERATING SYSTEMS 3 credits
This course will cover the Linux/UNIX operating system in depth. Advanced operating systems installation and some advanced features will be covered, including analysis and monitoring tools, DHCP, DNS, mail server management, and other system services. Scripting and other advanced commands will be taught. Three hours lecture. PREREQUISITE: PROG-325.

PROG-402 — COBOL 2 4 credits
The objectives of the course are to extend the student's knowledge of the COBOL language, to reinforce the ideals of structured programming, and to learn and adopt good programming standards. The knowledge gained from the COBOL 1 course will be used as the foundation for this course. The student will be introduced to file handling and other advanced techniques commonly used in business. PREREQUISITE: PROG-302.

PROG-404 — VISUAL BASIC.NET 3 4 credits
This course will build on the foundation laid within the Visual Basic 2 course. Industry standards, object orientation, and the development of bulletproof application programs will be stressed. Students will be exposed to the .NET Framework and Common Language Runtime (CLR.) Database access will also be stressed using ADO.NET as the access method, and MSDE (desktop version of Microsoft SQL Server) as the database. Students will build business objects using Visual Basic .NET. The reading and writing of SML data and the utilization of Crystal Reports will also be covered. PREREQUISITE: PROG-304; COREQUISITE: 404L

PROG-406 — C++ PROGRAMMING 4 credits
This course will prepare the student for further study in the areas of computer information systems or computer science. Emphasis is placed on data structures and OOP programming concepts. The implementation language will be C++. The student must have a working knowledge of beginning programming concepts, especially those of control structures, data types, scope and use of procedures or functions with parameters. The course will build upon this knowledge. A lab is required with this course. PREREQUISITE: PROG-303

PROG-407 — JAVA PROGRAMMING 4 credits
This course introduces the student to the concepts embodied within all Object-Oriented Programming (OOP): encapsulation, inheritance, and polymorphism. Students will use existing objects and learn how to create their own while developing both standalone applications and Applets for the Web. A working knowledge of C is assumed. PREREQUISITE: PROG-106.

PROG-410 — SYSTEMS ANALYSIS & DESIGN 3 credits
The goal of this course is to have the student further develop critical thinking skills as they apply to the analysis of information systems. The course begins with the embryonic concept of a need for a new or improved system, and focuses on those tasks that are performed by the systems analyst. Case studies and a long-term project will be employed throughout the course to emphasize theoretical material. PREREQUISITE: PROG-314.

PROG-412 — NETWORKS 1 3 credits
This course will teach network administration and various topics related to both Local Area Networks (LAN) and Wide Area Networks (WAN). Some of the topics covered will include LAN/WAN topology, protocols, network architecture, cabling, and the OSI model. This course will be taught from a network administrator's perspective and provide the student with the skills necessary to understand and administer a computer network. CO-REQUISITE: PROG-313 or PROG-325.

PROG-413 — NETWORKS 2 3 credits
This course will teach advanced network administration, including how to monitor network servers and LAN/WAN management. This course will emphasize network trouble-shooting and critical thinking skills. The course will also contain advanced LAN/WAN concepts including network layout, TCP/IP and network design.
PREREQUISITE: PROG-412

PROG-414 — NETWORKS 3 3 credits
This course will teach router configuration and fundamentals. The student will learn how switches/routers work and will be able to configure these devices. This course is a combination theory and practical hands-on switch/router configuration. Three hours lecture. PREREQUISITE: PROG-413

PROG-416 — ADVANCED SECURITY TOPICS 3 credits
This course has two components: backbone design, and a capstone project. The course will teach proper network design, including how to lay out a network for both protection and efficiency. The student will critique existing designs and design networks, and will learn to analyze a network design for flaws regarding security and usability. In the second component, the student will do a full security analysis on a company, including evaluating and documenting existing designs, suggesting a new design, and documenting and implementing the new design. Finally, the student tests the new design for security flaws. Three hours lecture. PREREQUISITE: PROG-350.

PROG-420 — COMPUTER USER SUPPORT 4 credits
The main purpose of this course is to provide students with a comprehensive understanding of the helpdesk environment and the knowledge, skills, and abilities necessary to work in the user support industry. It is useful for both the person who is starting out in the user support industry as well as those who are experienced professionals. It is also a very valuable reference for those interested in preparing for a management position in a user support organization. This course places an emphasis on problem-solving and communication skills in addition to the technical aspects of user support. It is also designed for the user who is new to the concept of user support. Through hands-on exercises and case projects, students will lean how to apply their knowledge and develop their ideas and skills. They will also learn how to work individually and in teams, which will prepare them for today's team-oriented work environment. PREREQUISITE: PROG-109; COREQUISITE: PROG-420L

WEBS-424—ADVANCED WEB AUTHORING 4 credits
This course provides a rigorous, project-based approach to website design and development. Current programming technologies and mark-up language such as HTML, DHTML, and XML will be used to create fully functioning web page collections using forms, objects, and scripting. .NET technologies including ASP, .NET, ADO.NET and web services will also be utilized. Defining and translating client needs into web pages using the most appropriate features of available web programming technologies will be highlighted. Emphasis will be placed on database connectivity and retrieving data from the database. PREREQUISITES: WEBS-324, PROG-208.

PROG-450 — INTERNET/NETWORK SECURITY 2 3 credits
This course is an extension of Internet Security 1 and will teach protection strategies in depth. Protection includes building firewalls and intrusion detection systems, understanding packet analysis, and assessing network security. Three hours lecture. PREREQUISITE: PROG-350.

HEALTH INFORMATION TECHNOLOGIES

MEDC-103 — CODING FOR THE HEALTH SCIENCES 1 credit
This course will explain the relationship between the International Classification of Diseases (ICD), the Current Procedural Terminology (CPT) and reimbursement policies. Emphasis will be placed on determining the correct documentation that will support the required codes. Practice will be provided utilizing computerized medical software.

MEDC-110 — INTRODUCTION TO CODING AND HEALTH INSURANCE 3 credits
This is an introductory course on the basics of ICD-9-CM, CPT, and HCPCS coding systems. It will include health insurance terminology as well as an explanation of various third party payers and their impact on the health care delivery system. This course will also explore managed care and Medicare plans and their effects on medical care, medical costs, and reimbursement. The students will also learn the basic financial and bookkeeping applications used in the medical environment. PREREQUISITE: MAST-101.

MEDC-120 — INTRODUCTION TO DIAGNOSTIC CODING 4 credits
This course is a comprehensive study of ICD-9-CM. It will involve an in-depth study of coding diseases for all the major body systems. A systematic study of hospital inpatient and ambulatory care coding will also be covered. Specificity and correct coding procedures and techniques will be stressed. This course will overview ICD-10, the new coding system implemented in 2002. PREREQUISITE: MAST-101

MEDC-121 — INTRODUCTION TO PROCEDURAL CODING 4 credits
This course is a comprehensive study of CPT and HCPCS. Coding for evaluation and management, anesthesia, surgery, pathology, and laboratory, radiology and medicine will be emphasized. This course will also explore coding for emergency rooms, hospitals, physicians' offices, and outpatient facilities. The HCPCS coding book will be utilized for coding DME, medical, Medicare, and Medicaid supplies. PREREQUISITE: MAST-101

MEDC-218 — HEALTH INSURANCE AND REIMBURSEMENT MANAGEMENT 3 credits
This course is designed to develop knowledge of various health insurance policies and plans. The student will become efficient in health insurance terminology and concepts. HMOs, PPOs, as well as government, state, and private insurance will be compared and contrasted. The course will also cover worker's compensation, disability, Champus, and Champva. Insurance forms and documentation for health claims reimbursement and billing will be utilized. Reimbursement calculations for DRG, capitation, fee for service, risk accounts, Medicare, and private insurance will be examined. PREREQUISITES: MEDC-120, MEDC-121.

MEDC-220 — TECHNICAL APPLICATIONS OF BILLING AND REIMBURSEMENT MANAGEMENT 2 credits
Students will use their coding, health insurance, and reimbursement knowledge didactically to utilize computer applications for billing and reimbursement. This course will utilize both an educational billing computer program and programs utilized in a healthcare billing department. PREREQUISITE: Keyboarding at 25 wpm

MEDC-301 — CO-OP FOR HEALTH INFORMATION TECHNOLOGIES 3 credits
This co-op will give the student work experience in the Health Information Technologies program. The student may gain experience as a medical coder, medical biller, or a patient account representative. PREREQUISITES: MEDC-218, MEDC-220.

MEDC-305—ADVANCED CODING 3 credits
This course is a continuation of ICD-9-CM, CPT, and HCPCS. Students will be introduced to advanced coding procedures, involving the coding of diseases and procedures from medical records. Three hours lecture. PREREQUISITES: MEDC-120, MEDC-121.

MEDC-401 — HEALTH INFORMATION MANAGEMENT 3 credits
This course will introduce the health information technology student to health care delivery systems, health information management, the patient record in acute, outpatient, and alternate care settings, numbering and filing systems, record storage and circulation, indexes, registers, health data collection, legal aspects, and reimbursement.

MEDC-405— CERTIFICATION EXAM PREPARATION FOR HEALTH INFORMATION TECHNOLOGIES 2 credits
This course will prepare the health information technology student to take the Certified Coding Assistant (CCA) examination administered by the AHIMA. This examination is required by many employers for entry-level coding positions. The student will be introduced to the test-taking experience, the construction of the test, the content of the test, and test time constraints. PREREQUISITES: MEDC-218, MEDC-220, MEDC-305.

OFFICE INFORMATION TECHNOLOGIES

LEGL-306 — LEGAL TERMINOLOGY AND TRANSCRIPTION 3 credits
This course is designed to give the student a background in basic legal terminology, including Latin terms. Legal transcription skills will be acquired through dictation with emphasis on the use of transcription equipment in conjunction with the personal computer. A student who successfully completes this course will be able to spell and pronounce, as well as define and understand, legal terms through practical application. A grade of "C" or better is required. PREREQUISITES: CLER-204 or OFFS-215 or equivalent.

LEGL-406 — ADVANCED LEGAL TRANSCRIPTION 3 credits
This course continues to emphasize legal terminology through dictation and usage of transcription equipment with the personal computer. Students learn to format legal documents and correspondence related to different specialty areas. This course will also provide students with the knowledge, terminology, and background needed to prepare all the documents used in a lawsuit, from the initial filing of the suit to its

conclusion. Emphasis will be placed on grammar, spelling, punctuation, capitalization, proofreading, and efficient use of reference materials resulting in production of mailable copies. A grade of "C" or better is required. PREREQUISITE: LEGL-306.

LEGL-407 — LEGAL OFFICE CONCEPTS AND PROCEDURES 3 credits
This course presents a basic understanding of legal concepts of the law for legal office assistants. It provides an analysis of the legal office environment and emphasizes principles of the law. With simulated activities and cases, students learn various aspects of the law such as real estate and property transfer, litigation, wills and probate, and corporate law. A grade of "C" or better is required. PREREQUISITE: LEGL-306

MOFF-300 — MEDICAL OFFICE MANAGEMENT 3 credits
This course will familiarize the student with medical management software. The student will build patient files, post entries, make appointment schedules, complete billing procedures, and generate reports. PREREQUISITE: OFFS-215

MOFF-321 — MEDICAL INSURANCE AND REIMBURSEMENT 3 credits
This course is designed to give students knowledge of the reimbursement for medical services by private and governmental insurance providers. Emphasis will be placed on the impact of changes in health care management, including managed care, gatekeeping, and primary and secondary coverages. Students will learn how to abstract information necessary for processing reimbursement forms and will gain an understanding of the importance of medical coding in the reimbursement process. Relevant legal issues will also be covered.

MOFF-454 — MEDICAL MACHINE TRANSCRIPTION 3 credits
This course is designed to introduce the student to machine transcription. Students will learn how to operate machine transcription equipment while keyboarding various medical documents such as case histories, chart/progress notes, physical examinations, and medical correspondence. PREREQUISITE: OFFS-215 ("C" or better).

MOFF-456 — ADVANCED MEDICAL MACHINE TRANSCRIPTION 3 credits
This course is a continuation of MOFF-454. Students will transcribe advanced medical material such as case histories, medical reports, conferences, etc., in mailable format. Basic rules of capitalization, number usage, punctuation and abbreviations in transcribing medical documents will be emphasized. PREREQUISITES: MOFF-454, OFFS-206

CLER-204 — INTRO. TO MACHINE TRANSCRIPTION 3 credits
This course is an introduction to basic transcription techniques with emphasis on spelling, grammar, punctuation, number usage, and capitalization. Vocational competence in machine transcription is the principal goal. Developing good listening techniques, producing first-time mailable business communications, and learning the importance of machine dictation and transcription in the word processing cycle are the important objectives in this course. PREREQUISITES: OFFS-105, 'C' or better.

OFFS-093 — INTRODUCTION TO KEYBOARDING - ESL 3 credits
This course is designed for students wishing to develop touch keyboarding skills. An introduction to the alphabetic and numeric keyboard will be presented and proper keyboarding techniques will be reinforced. Emphasis will also be placed on building speed and accuracy. A minimum touch keyboarding speed of 20 wpm/three minutes/three errors or less is required for course completion. This is a developmental course. Credit for this course will not be counted toward fulfilling graduation requirements at STCC. PREREQUISITE: ESL Level 3; may be taken concurrently.

OFFS-099 — COMPUTER KEYBOARDING FOR HEALTH 3 credits
This developmental keyboarding course is designed especially for students enrolled in the School of Health Sciences. Students will be introduced to Windows, a software program for PC users, while learning touch keyboarding skills which build speed and accuracy. The student will become familiar with keyboarding, language, and grammatical skills that are unique to positions in the medical field.

OFFS-100 — BASIC KEYBOARDING SKILLS 1 credit
This course is designed for any individual wishing to develop touch keyboarding skills applicable to today's sophisticated electronic typewriter and computer keyboards. A minimum touch keyboarding speed of 20 wpm is required for course completion. Available to the entire STCC community. PREREQUISITES: None.

OFFS-105 — COMMUNICATIONS/EDITING 3 credits
This one-semester course prepares the student for production of mailable business communications in machine transcription and word processing courses. The course emphasizes the basic principles of typewriting style and word division, punctuation style, spelling improvement, capitalization, number and abbreviation styles, proofreading, and editing. Achievement tests will be administered upon completion of each area of emphasis. PREREQUISITE: ENGL-100 or CO-REQUISITE: ENGL-100.

OFFS-116 — KEYBOARDING APPLICATIONS 1 3 credits
This course develops touch control of the alphabetic and numeric keyboard, reinforces proper keyboarding techniques, builds basic speed and accuracy, and provides practice in applying those skills to the formatting of reports, business letters, and envelopes. Students must achieve a "C" or better. Minimum speed requirement for the course is 30 wpm/three minutes/three errors or less.

OFFS-117 — OFFICE PROCEDURES 3 credits
In this course the student will learn to manage the administrative functions in the electronic office such as handling telephone communications, implementing records management systems, and managing business information. The student will also learn the importance of good working relationships for career success.

OFFS-119 — FUNDAMENTALS OF KEYBOARDING 3 credits
This course is a continuation of Introduction to Keyboarding, and will develop touch control of the alphabetic and numeric keypad, reinforce keyboarding techniques, and build speed and accuracy. Students will be introduced to the proper formatting of reports, business letters, and envelopes. Students must achieve a C or better. Minimum speed requirement for the course is 30 wpm/three minutes/three errors or less. PREREQUISITE: OFFS-093 or permission of instructor.

OFFS-120 — CUSTOMER RELATIONS 3 credits
The student will be introduced to the concepts and skills needed to attract and retain customers. This course is designed to teach the student exemplary customer service thinking in public or private, domestic or international organizations. Listening techniques, verbal and nonverbal communications, telephone communications, and use of technology will be emphasized, as well as resolving customer conflicts and complaints. Three hours of lecture.

OFFS-125 — TEN-KEY PAD 1 credit
This course prepares the student for keying numeric data entry on the computer. The student is introduced to the ten-key pad by touch. Speed and accuracy drills will be emphasized. A minimum numeric data entry rate of 60 strokes a minute (SAM) is required for course completion.

OFFS-200 — KEYBOARD SKILL BUILDING 1 credit
This course is designed to assist individuals in building keyboard speed. Individual speed building goals will be determined with a minimum goal of 10 wpm gain for five minutes with five or less errors. Available to the entire STCC community. Students wishing to enroll in more than one module may do so under a directed study contract with the instructor. PREREQUISITES: OFFS-100, CMPA-116.

OFFS-210 — COMMUNICATIONS/EDITING 2 3 credits
This course is a continuation of Communications/Editing 1 (OFFS-105.) Continued emphasis will be on punctuation, capitalization, number and abbreviation style; word mastery; and proofreading and editing techniques. Achievement tests will be administered upon completion of each area. The student should be able to prepare mailable business documents. Three hours of lecture. PREREQUISITE: OFFS-105.

OFFS-215 — KEYBOARDING APPLICATIONS 2 3 credits
This course is a continuation of OFFS-116. Students are introduced to the basic formatting of simple tables, reports, and business correspondence. Continued emphasis is placed on building speed and accuracy. Students must achieve a grade of "C" or better. Minimum speed requirement for the course is 40 wpm/three minutes/three errors or less. PREREQUISITE: OFFS-116 and a touch keyboarding rate of 30 wpm.

OFFS-216 — ADMINISTRATIVE MANAGEMENT/COMMUNICATIONS 3 credits
This course helps the student understand business information systems and how technology is used to create productivity in today's business office. The interaction of people, equipment, and procedures provides the basic structure for this course. The student will learn to coordinate office communications, conferences, meetings, and travel arrangements; distribute written documents; employ time management techniques; learn the functions of supervisors; and make career decisions. PREREQUISITE: None

OFFS-220 — INTRODUCTION TO EDITING/TRANSCRIPTION 3 credits
This course prepares students for the production of mailable business communications. Basic transcription techniques will be introduced. The course emphasizes the basic principles of word division, punctuation style, spelling improvement, capitalization, number and abbreviation styles, proofreading and editing. Developing good listening techniques, producing mailable business communications, and learning the importance of machine dictation/transcription in the word processing cycle will be emphasized. PREREQUISITES: OFFS-100 and DWRT-099 ("C" or better) or placement at ENGL-100

OFFS-225 — DOCUMENT PROCESSING 1 3 credits
This course introduces the student to the formatting of business correspondence. Students will learn how to format reports, business letters, memorandums, and tables utilizing the latest word processing software. A minimum touch keyboarding rate of 30 wpm/3 minutes/3 errors or less is required for course completion. PREREQUISITES: OFFS-100 and CMPA-101; CO-REQUISITE: ENGL-100

OFFS-230 — MEDICAL COMPUTER APPLICATIONS 2 credits
This course is specifically designed to introduce the medical assistant to computer terminology, computer concepts, word processing, medical transcription, medical documents, records management, and telephone techniques. Students will be introduced to basic word processing formatting techniques while applying these techniques when creating and transcribing medical documents such as case histories and physicals,

lab and radiology reports, operative reports, charts/progress notes, consultation letters, etc. Records management systems, telephone techniques and etiquette, and office mail will be presented. The course meets for two lecture hours and a one-hour lab. PREREQUISITE: OFFS-100; CO-REQUISITE: OFFS-230L

OFFS-245 — MICRONUMERICS 3 credits
This course emphasizes the use of the touch system for micronumeric data entry on the ten-key pad. A minimum numeric data entry rate of 90 strokes a minute (SAM) is required for course completion. Basic math functions using common keyboard features are developed to solve everyday business and consumer applications such as check registers, payroll registers, invoices, sales tax, comparison pricing, etc. PREREQUISITES: Must place in ALGB-081 or above on math placement test.

OFFS-260 — MEDICAL WORD PROCESSING 3 credits
This course is designed specifically to familiarize the medical assistant with word processing. Major emphasis is placed on using basic word processing functions and transcription equipment in producing documents such as case histories, discharge summaries, medical reports, and medical correspondence. The student will also be introduced to records management and the handling of office mail. The course meets for three lecture hours and a one-hour lab. PREREQUISITE: OFFS-100.

OFFS-300 — KEYBOARD SPEEDBUILDING AND APPLICATIONS 2 credits
This course introduces students to keyboarding techniques, drills, and strategies which aid in developing superior keyboarding capabilities. By utilizing an individualized diagnostic/prescriptive method, this is a complete speedbuilding and accuracy-development keyboarding program which enables students to identify their speed and accuracy problems and to select appropriate corrective drills. Five-minute timed writings are presented. PREREQUISITE: 20 WPM touch keyboarding rate.

OFFS-304 — MACHINE TRANSCRIPTION 3 credits
This course emphasizes the techniques and operation of machine transcription equipment. Transcription skills will be acquired through the use of a wide variety of business related dictation — executive, legal, and medical. Grammar, spelling, punctuation, capitalization, proofreading, and the use of reference material will be stressed. The relationship of machine transcription to the word-processing concept will also be introduced. The course meets three hours per week. PREREQUISITE: OFFS-215, CLER-204.

OFFS-315 — KEYBOARDING APPLICATIONS 3 3 credits
This course is a continuation of OFFS-215. Students are introduced to the advanced formatting of correspondence, reports, tables, and forms, as well as designing of office publications. Students learn how to create headers/footers, find replace, styles, templates, labels, document merging, columns, sorting, and page orientation. Continued emphasis is placed on building speed and accuracy. Students must achieve a grade of "C" or better. Minimum speed requirement of 50 wpm/five minutes/five errors or less. PREREQUISITES: OFFS-215, 40 wpm keyboarding rate

OFFS-325 — DOCUMENT PROCESSING 2 3 credits
This course is a continuation of Document Processing 1. Continued emphasis is placed on the formatting of letters, reports, and employment documents utilizing the advanced features of the latest word processing software. A minimum touch keyboarding rate of 40 wpm/5 minutes/5 errors or less is required for course completion. PREREQUISITE: OFFS-225 (C or better)

OFFS-395 — OFFICE INFORMATION TECHNOLOGIES INTERNSHIP 3 credits
This course is designed for students in the Office Information Technologies programs who have completed 30 credit hours. The internship program allows advanced students to go out into the business world and participate in on-the-job training activities directly related to their major field of study. Students will attend seminar sessions on campus in addition to a minimum of ten hours per week of practical field observation. A faculty coordinator will meet routinely with each student to review work completed. PREREQUISITE: Completion of 30 degree credits for degree students and minimum QPA of 2.5.

OFFS-397 — OFFICE ADMINISTRATION COOPERATIVE EDUCATION 3 credits
This course is designed for students in the Office Information Technologies programs who have completed 30 credit hours. The Cooperative Education program allows advanced students to go out into the business world and participate in paid employment directly related to their major field of study. Students will attend seminar sessions on campus in addition to a minimum of ten hours per week of practical field observation and on-the-job experience in area companies approved by the Cooperative Education Office and the Office Information Technologies program. A faculty coordinator will meet routinely with each student to review work completed. PREREQUISITE: 30 credit hours completed and department approval.

OFFS-401— ADVANCED KEYBOARDING 3 credits
This course utilizes advanced desktop publishing principles for students enrolled in the Executive and Legal Office Information Technologies programs. Difficult materials in manuscripts, statistical, letter, and rough draft present a challenge in problem solving, in addition to the preparation of legal documents. The minimum speed required for this course is 50 wpm for five minutes with five or less errors. A speed of 'C' or better is necessary to meet graduation requirements. PREREQUISITE: OFFS-315.

OFFS-410 — COMPUTER INTEGRATED SYSTEMS 2 3 credits
This course is a continuation of OFFS-310 and introduces the student to the concept of adding visual enhancements to documents. Students prepare charts and worksheets while learning to link and embed objects. Students are also introduced to the concept of organizing, sorting, and managing data while learning to prepare merged letters, envelopes and mailing labels, as well as sorting and selecting data and creating and organizing database files. PREREQUISITE: OFFS-310.

OFFS-495 — OFFICE SYSTEMS INTERNSHIP 3 credits
This course is designed for students in the Office Information Technologies programs who have completed 45 credit hours. The internship program allows advanced students to go out into the business world and participate in on-the-job training activities directly related to their major field of study. Students will attend seminar sessions on campus in addition to a minimum of ten hours per week of practical field observation. A faculty coordinator will meet routinely with each student to review work completed. PREREQUISITE: 45 credit hours for degree students, QPA 2.5.

OFFS-497 — OFFICE SYSTEMS COOPERATIVE EDUCATION 3 credits
This course is designed for students in the Office Information Technologies programs who have completed 45 credit hours. The Cooperative Education program allows advanced students to go into the business world and participate in paid employment directly related to the major field of study. Students will attend seminar sessions on campus in addition to a minimum of 10 hours per week of practical field observation and on-the-job experience in area companies approved by the Cooperative Education Office and the Office Information Technologies program. A faculty coordinator will meet routinely with each student to review work completed. PREREQUISITE: 45 credit hours for degree students and 15 credit hours for certificate students, and department approval.

Integrative Health Care

MASSAGE THERAPY

INHC-110 — MASSAGE TECHNIQUES 1 5 credits
An introduction to the field of therapeutic massage practice. Topics covered include but are not limited to the history, theory, physiology, application, and technical applications of relaxation massage. Issues of ethics and professionalism, draping, licensure, and self-care are addressed. Students will learn to perform the relaxation massage treatment of the front of the body. Two hours of lecture, six hours lab. CO-REQUISITE: INHC-110L

INHC-210 — MASSAGE TECHNIQUES 2 5 credits
A more in-depth study of the physiology of massage techniques and their effects on the body systems. The effects of massage applications on the primary systems of the body, contraindications and benefits of treatment to each system are explored. Students complete training in the full body relaxation massage, seated massage, sporting event massage, and reflexology applications. Issues in professionalism and boundaries in treatment are continued. Two hours of lecture, six hours lab. PREREQUISITE: INHC-110; CO-REQUISITE: INHC-210L

INHC-301 — MUSCLE STRUCTURE AND FUNCTION 4 credits
A study of the muscular-skeletal system with emphasis on the structure and function of muscle tissue in the body. Demonstration of the knowledge of the origin, insertion, action, and patterning of muscle fiber directions for all the major muscles of the body will be required. Students will construct the major muscles on a skeletal model for a kinesthetic and visual awareness of how to apply massage techniques appropriately. Three hours of lecture, two hours lab. PREREQUISITE: INHC-110; CO-REQUISITE: INHC-301L.

INHC-310 — MASSAGE TECHNIQUES 3 5 credits
A study of deep tissue, rehabilitative, and orthopedic approaches to massage therapy treatment for the appendicular portion of the musculo-skeletal system. Information on the etiology, assessment, and treatment planning for orthopedic injuries that are indicated for treatment with rehabilitative massage modalities is presented. Two hours of lecture, six hours lab. PREREQUISITE: INHC-210; CO-REQUISITE: INHC-310L

INHC-325 -- MEDICAL MASSAGE THERAPY 1 2 credits
This course offers students an opportunity to learn the applications of advanced massage techniques in a therapeutic medical environment. Students will work in a rehabilitative facility under the supervision of a faculty member. They will draw on prior competencies in the theory and practice of therapeutic massage, pathology, and kinesiology to develop treatment plans and perform indicated techniques as a part of the client's rehabilitative process. Students will work with clients in the areas of pain management; rehabilitation of injuries, stroke, cancer; the promotion of health; labor and delivery in pregnancy among others. One hour of lecture. PREREQUISITES: INHC-200, INHC-210. CO-REQUISITE: INHC-325L.

INHC-350 — CLINICAL INTERNSHIP 1 1 credit
This course gives students an opportunity to put the skills they have learned in their first year of study into practice in the on-campus Rehabilitation Clinic. The supervised student clinic provides experience in performance of business and technical duties

necessary for the successful operation of a massage business. The clinic is open to the public two afternoons a week. PREREQUISITE: INHC-210.

INHC-400 — MASSAGE TECHNIQUES 4 5 credits
A continuation of the training in deep tissue, rehabilitative and orthopedic approaches to massage therapy treatment. Treatment protocols are introduced for the axial portion of the musculo-skeletal system. The history of hydrotherapy and spa treatments, and their applications in therapeutic massage, are presented. Students receive Level 1 Reiki training. A capstone technical evaluation integrating all the modalities learned in the program is performed. Two hours of lecture and six hours of lab. PREREQUISITE: INHC-310. CO-REQUISITE: INHC-400L

INHC-412 —ORIENTAL BODYWORK 2 credits
This course will introduce the student to the concepts of East Asian medicine as it applies to bodywork. The student will learn a full body treatment protocol to perform a beginning level treatment using the principles and techniques of Shiatsu. One hour of lecture and two hours of lab. CO-REQUISITE: INHC-412L.

INHC-425 -- MEDICAL MASSAGE THERAPY 2 2 credits
This course offers students an opportunity to learn the applications of advanced massage techniques in a therapeutic medical environment. Students will work in a rehabilitative facility under the supervision of a faculty member. They will draw on prior competencies in the theory and practice of therapeutic massage, pathology, and kinesiology to develop treatment plans and perform indicated techniques as a part of the client's rehabilitative process. Students will work with clients in the areas of pain management; rehabilitation of injuries, stroke, cancer; the promotion of health; labor and delivery in pregnancy among others. One hour of lecture.
PREREQUISITE: INHC-325; CO-REQUISITE: INHC-425L.

INHC-440 — ASIAN BODYWORK 1 4 credits
This course will introduce the student to the concepts of east Asian medicine as it applies to bodywork. The student will learn and practice proper body mechanics and Asian bodywork techniques, and will learn a full body treatment protocol. At the end of the course, the student will be able to perform an effective beginning level treatment. Two hours lecture; four hours lab. PREREQUISITE: INHC-412; CO-REQUISITE: INHC-440L

INHC-441 — ASIAN BODYWORK 2 4 credits
This course is a continuation of Asian Bodywork 1, reinforcing what has already been learned, and introducing new concepts and techniques in Asian bodywork. East Asian theories of disease and energetic physiology are covered, and new skills to enhance technique are demonstrated and practiced. The student will become more proficient in Asian bodywork as more options for an effective Asian bodywork session unfold. Two hours lecture; four hours lab. PREREQUISITE: INHC-440; CO-REQUISITE: 441L

INHC-450 — CLINICAL INTERNSHIP 2 1 credit
This course gives students an opportunity to put the skills they have learned in their three semesters of study into practice in the on-campus Rehabilitation Clinic. The supervised student clinic provides experience in performance of business and technical duties necessary for the successful operation of a massage business. The clinic is open to the public two afternoons a week. Two hours of clinical experience.
PREREQUISITE: INHC-350.

INHC-460 — BOTANICAL MEDICINE 1 4 credits
An introduction to the use of common medicinal herbs. Students will gain a knowledge of the historical and present uses of herbs for healing and wellness. The identification, preparation, storage, and proper use of herbal remedies will be included. Four hours of lecture.

INHC-461 — BOTANICAL MEDICINE 2 4 credits
An introduction to the use of common medicinal herbs. For application to common problems of the digestive, nervous, respiratory, and immune systems. Students will study the proper formulations and applications of medicinal plants to these systems. Four hours lecture.

INHC-470 — AROMATHERAPY 1 4 credits
In Aromatherapy 1, students will learn another perspective of botanical medicine. This semester will focus on using aromatic/essential oils extracted from specific plants. Essential oils have powerful medicinal, therapeutic, and disinfectant properties. Uses of these oils include and are not limited to: stress reduction, pain relief, mood enhancement, infection prevention/control, etc. Safety and proper use of essential oils will be stressed throughout this semester. Profiles on lavender, peppermint, sweet orange, rosemary, eucalyptus, tea tree, geranium, and ylang will be discussed.

INHC-480 — COLOR THERAPY 2 credits
This course will investigate the philosophy and principles of the use of color and light for the healing of various diseases, and as a preventive agent for maintaining wellness. Students will study specific diseases and the particular colors of the light spectrum used to aid their healing. Applications of color in the environment and in healing visualizations will be explored.

Interdisciplinary Health Studies

ATHL-101 — RAPE AGGRESSION DEFENSE FOR WOMEN 2 credits
The RAD course is specifically designed to empower women to take charge of their own survival. This course is a combination of discussion, instruction, and physical activity to educate women in prevention and awareness strategies and self-defense techniques to avoid rape and physical assault. The women will learn the proper use of pepper mace and take part in an optional simulated live attack. RAD is taught in a safe, secure environment with sensitivity to the needs, values, and well-being of women.

ATHL-102 — PHYSICAL AGGRESSION DEFENSE 2 credits
This course is specifically designed for men. Easy to learn but effective self-defense techniques will be taught and students will learn successful methods to enhance their street awareness and safety, and reduce risk. The men will analyze and discuss rage and anger control, and will learn how to deal with relationships in a non-violent way. They will be trained in the proper use of pepper mace and take part in an optional simulated live attack.

ATHL-150 — YOGA FOR HEALTH 1 credit
This course will provide an introduction to yoga and meditation techniques for beginners. Students will be introduced to the history and philosophy of yoga, elementary

yoga asanas, breathing techniques, meditation, and creative visualization as a tool for stress reduction, and will develop a 45-minute beginner yoga routine. One hour lecture.

ATHL-201 — ADVANCED RAPE AGGRESSION FOR WOMEN 2 credits
A continuation of ATHL-101. PREREQUISITE: ATHL-101

HCAR-110 — HEALTH DIRECTIONS SEMINAR 3 credits
This is a fundamental course which introduces the student to basic health concepts, study skills, and basic communication in the field of health. The focus is planned to provide a basis for cognitive career exploration and critical thinking. PREREQUISITE: None

HCAR-115 — HEALTH AND WELLNESS 3 credits
An introductory health and wellness course that explores the basic components of a healthy lifestyle including healthy lifestyle, behavior, nutrition, exercise, relationships, and environmental awareness. PREREQUISITE: None

HCAR-120 — STRESS IN HEALTH AND DISEASE 2 credits
This course will examine the historical medical perspectives and research on stress and disease in the 21st century. Students will learn the physiology of stress and its role in the development of disease. Stress reduction techniques and disciplines which fight stress such as meditation, yoga, Tai Chi and Gigong will be examined. Two hours of lecture. CO-REQUISITE: HCAR-120L

HCAR-200 — HEALTH TOPICS SEMINAR 3 credits
The content of this course deals with issues of concern to one or more of the recognized or emerging health careers. Emphasis will be on the process used to explore, select, and research an issue, then present justifiable findings and conclusions. This seminar format will require participants to communicate with one another in and out of scheduled class time. Use of the STCC library and Internet resources is required. Honors add-on by permission of the faculty. PREREQUISITE: ENGL-100

HCAR-205 — MEDICAL IMAGING AND COMPUTERS 3 credits
An entry-level exploration of the technological development of radiography, computer tomography, magnetic resonance, nuclear medicine, diagnostic medical sonography, and related technology. Methods for computer-based image production will be emphasized. Current uses and future trends will be introduced for each of the imaging fields. Appropriate use of related medical terminology is required. E-mail address and computer access is required. Computers are located in many campus sites. PREREQUISITE: None.

HCAR-220 — HOLISTIC HEALTH AND WELLNESS 2 credits
A basic health studies course which examines the achievement of health and wellness through the six dimensions of wellness: social, physical, intellectual, career, emotional, and spiritual health. Two hours of lecture.

HCAR-300 — CURRENT ISSUES ACROSS THE CONTINUUM OF CARE 3 credits
This course addresses the issues facing physical therapist assistant and occupational therapy assistant students in different clinical settings. Topics include but are not limited to legal/ethical issues, licensure laws/practice acts, reimbursement, CQI, employer/employee relationships, documentation, and collaboration with other disciplines.

HCAR-350 — PATHOLOGICAL CONDITIONS 3 credits
This course presents the tissue changes resulting from trauma, disease, and degenerative processes. The course acquaints the student with the orthopedic, neurological, and general medical/surgical conditions encountered in treating patients. PREREQUISITE: BIOL-132 or BIOL-148.

HCAR-430 — COMPLEMENTARY MEDICAL THERAPY 2 credits
A look at the history of the delivery of medicine and the paradigm shift from ancient natural healing systems to modern scientific medicine. Students will study a variety of complementary health modalities including Chinese medicine, Ayurvedic medicine, and ancient Greco-Roman medical systems, naturopathy, herbal medicine, and homeopathy. Two hours lecture.

HCAR-450 — HEALTHCARE ADMINISTRATION PRACTICES 3 credits
This course will be taught as a web-assisted course and provides the basis for developing a strategy to operate a clinical practice. The principles learned may be applied to a wide variety of situations. Topics will include ethical practice, communication, financial management, marketing, business management, management decision-making, administrative policies and procedures, and risk management. Three hours lecture.

Landscape Design and Management Technology

LAND-111 — TREES IN THE LANDSCAPE 4 credits
A course dealing in tree identification and use, as related to landscape work. Important types, both native and introduced, are discussed. Limited to trees generally hardy in the New England area. Representative types are discussed during laboratory sessions. Lectures deal with general topics concerning tree use. Field trips, both on and off campus, are used to view the trees discussed. Three one-hour lectures, and three one-hour labs.

LAND-120 — PRINCIPLES OF HORTICULTURE 3 credits
A basic course in general horticulture, introducing the student to the fundamentals of plant growth factors including soils, insects and diseases, and plant production techniques. The lectures cover the theoretical aspects of horticulture and the laboratories are used for hands-on work with plants in the greenhouse as well as field trips to horticultural businesses that employ graduates. Two one-hour lectures, one three-hour lab.

LAND-210 — PRESENTATION TECHNIQUES 3 credits
A course in mechanical drafting, stressing the media and techniques commonly used in the preparation of landscape plans. The use of instruments, lettering and line techniques is covered first, followed by the development of isometric and perspective drawings. Working in three dimensions is stressed, so that the student may best visualize spatial relationships in future landscape design courses. Three two-hour labs.

LAND-220 — TURF MANAGEMENT 3 credits
The study and identification of turf grasses as used in the New England area. Much emphasis is placed upon the best use of the types involved. Topics in the lectures include soil and fertilization requirements, drainage and irrigation, best turf types, grass and seed identification, maintenance and renovation, and disease and insect control. The laboratories are involved in soil testing, turf growing, maintenance techniques and field trips. Two hour lecture, one three-hour lab.

LAND-311 — SHRUBS IN THE LANDSCAPE 4 credits
A continuation of LAND-111, covering the identification and use of the commonly used native and introduced shrubs and vines in this area. Emphasis is placed upon the best use of the types involved. Lectures are concerned with utilization of plant features such as flowers and fruits and with effects of the environment on the plants discussed. Laboratories are used for the discussion of specific plants and field trips. Three one-hour lectures and three one-hour labs.

LAND-320 — LANDSCAPE PRACTICES 3 credits
A course dealing with the basic aspects of landscape plantings and maintenance, including tree care and the principles of estimating. Students will be concerned with the hands-on scheduling, planting operations, and seasonal maintenance tasks, in addition to developing basic landscape job estimating skills. Two one-hour lectures, one three-hour lab. PREREQUISITE: LAND-210; CO-REQUISITE: LAND-320L.

LAND-330 — LANDSCAPE DESIGN 1 3 credits
A course in residential landscape design stressing basic measuring design techniques and elements. Topics covered in lecture are line, shape, form, texture, pattern, color, the processes of design, the development of outdoor living areas, play areas, and private gardens, and the orientation of structures on the site. One one-hour lecture, two two-hour labs. PREREQUISITES: LAND-210, MATH-117; CO-REQUISITE: LAND-330L.

LAND-350 — LANDSCAPE OPERATIONS 3 credits
This course deals with the basic aspects of starting, staffing, and operating a typical landscaping business through the year. Additional materials will include landscape contracts and law. Students will be concerned with operations through the seasons of the year, and with practices such as business ethics, purchasing, scheduling of work operations, and personnel issues. Two hours lecture, three hours lab. CO-REQUISITE: LAND-350L.

LAND-410 — PLANT PROPAGATION 3 credits
A course dealing with the procedures used in propagating and growing plant materials. Lectures deal with the theoretical aspects of growing and the laboratories are devoted to greenhouse and field work. Several field trips are taken to commercial nursery operations in the area. Two-hour lecture, one three-hour lab.

LAND-420 — LANDSCAPE DESIGN 2 3 credits
A continuation of Landscape Design 1 stressing presentation and analysis. The areas dealt with are urban shopping and business spaces, small office buildings, schools and playgrounds, and parking areas. One one-hour lecture, two two-hour labs. PREREQUISITE: LAND-330.

LAND-431 — EARTH FORMS & STRUCTURES 4 credits
A study of the equipment, materials and methods used in constructing earth forms and landscape features such as walls, walks, drives, fences and terraces. Considerable field work is involved, in which the students lay out and construct features as mentioned above. Three one-hour lectures, one three-hour laboratory. PREREQUISITE: LAND-330.

LAND-450 — ENTOMOLOGY/DISEASE CONTROL 3 credits
This course serves as an introduction to the study of insects, diseases, and weeds that affect the growth of ornamental plants in the New England area. Both the identification and control of the most common plant pests will be discussed. Control by cultural and biological methods, rather than the use of chemicals, will be stressed, but the realistic need for chemical control and the safe use of chemicals will also be a part of the course. Preparation for taking the state pesticide licensing examination will be a part of the course. Two one-hour lectures and one three-hour lab. PREREQUISITE: None.

Laser Electro-Optics Technology

LEOT-090 — LAB AND LASER SAFETY 1 credit
This is a *mandatory* course for all students in the CSET, ESET, LEOT, and TCOM programs. The course deals with the subject of laser safety and laboratory safety. The various government regulations concerning the different classes of lasers will be covered. Topics include laser safety signs, MPE, NHZ, and EMC. The student is required to complete this course and pass a written examination before taking any laser laboratory courses. One hour of lecture. This is a developmental course. Credit for this course will not be counted toward fulfilling graduation requirements at STCC. PREREQUISITE: None.

LEOT-150 — INTRODUCTION TO PHOTONICS 1 credit
Many present-day electronics-based systems will be replaced by photonics-based systems in the future. This course is an introduction to the field of photonics. Topics covered include: light, physical optics, wave optics, lasers, holography, fiber optics, and laser applications. Devices such as laser diodes, gas lasers, plastic and glass fibers, various focusing lenses, OTDRs, and power meters will be used. Optical measurements such as radiation, radiometry, photometry, and photonics applications in the following fields will be explored: telecommunications, medical and electrical fields. Theories such as Snell's law, thin lens equation, diffraction, laser emission, Huygen's principle, total internal reflection, launching angles, optical loss, and irradiance will be covered. One hour of lecture. PREREQUISITES: MATH-132, ESET-141, ESET-145.

LEOT-322 — INTRODUCTION TO LASERS 3 credits
This course consists of two hours of lecture and a three-hour lab session. The course begins with an introduction to the atom, emission processes, and simulated emission of radiation. Laser output characteristics and modification, materials, components and industrial laser applications are also discussed. Safety and laboratory procedures are also covered. The lab will reinforce the theories and topics presented in the lecture. Two hours lecture. PREREQUISITES: Senior standing in LEOT, LEOT-150; COREQUISITE: LEOT-322L

LEOT-327 — LASER ELECTRONICS 1 4 credits
This course deals with the practical applications of linear electronic devices and circuits to the operation and control of laser systems. Topics will include high voltage power supplies, normal and switching supplies, diode laser power supplies control interlocks, high voltage design considerations, and high voltage safety. Three hours of lecture. PREREQUISITE: ESET-141; CO-REQUISITE: LEOT-327L

LEOT-330 — GEOMETRICAL OPTICS 4 credits
This course is the first of a two-semester sequence covering basic optical theory and components. Each course consists of three one-hour lecture sessions and a three-hour lab. Geometrical optics deals with the rectilinear propagation of light and the elementary treatment of image formation, lenses, mirrors, prisms, fiber optics, ray tracing, aberrations, optical system design, and optical instruments. The laboratory section parallels the lectures and familiarizes the student with optical laboratory components and procedures. PREREQUISITE: Senior standing.

LEOT-345 — PHOTONICS 4 credits
This course deals with the applications of linear integrated circuits to semiconductor lasers and integrated optical devices. Topics to be covered will include laser diode driver and detector circuits, photodiodes and phototransistors, integrated amplifiers, RF modulators, normal and switching power supplies. Lab included. PREREQUISITE: Senior standing in LEOT or permission of instructor.

LEOT-349 — FIBER OPTIC COMMUNICATIONS 3 credits
This course will present the principles and techniques associated with the transmission of optical radiation in fibers and free space. Topics to be discussed include: optical communications components, sources, detectors, assemblies, and modulation techniques. Homodyne and hetrodyne detection will be discussed, as well as the design considerations for optical communications systems. The lab will give students hands-on experience using state-of-the-art optical equipment. Three hours lecture. PREREQUISITE: Senior standing in LEOT, LEOT-150 and TCOM-330; COREQUISITE: LEOT-349L

LEOT-350 — OPTICAL SYSTEM DESIGN 3 credits
This course deals with the system configuration and design of optical systems. Various types of lenses, mirrors, and catoptric, dioptric and catadioptric systems will be covered, as well as holographic optical elements, image evaluation, OTF and MTF analysis. PREREQUISITE: Senior standing in LEOT or permission of instructor.

LEOT-352 — OPTICAL TEST AND MEASUREMENT 4 credits
This course will provide the student with a working knowledge of the various devices and techniques used for evaluating optical systems. Topics will include the applications and use of spectrometers, monochromators, spectraphotometers, and Michelson, Febry-Perot, Twyman-Green, and Mach-Zender interferometers. Spatial resolution of optical systems. Lab included. PREREQUISITE: Senior standing in LEOT or permission of instructor.

LEOT-375 — OPTICS 4 credits
This course covers the theory and applications of geometrical and wave optics to modern optical systems. Topics will include image formation, lenses, mirrors, prisms, ray tracing, aberrations, diffraction, interference, polarization, spectroscopy, holography, and optical system design. Lab exercises will closely parallel classroom discussions and should help bridge the gap between theory and practical use of the concepts expressed. Three hours lecture. PREREQUISITES: senior standing in LEOT and LEOT-150; COREQUISITE: LEOT-375L

LEOT-415 — LASER SYSTEMS 4 credits
This course provides an in-depth analysis of the various types of laser systems in use today. Among the laser systems to be studied are semiconductor lasers, solid-state lasers, ion lasers, molecular and dye lasers, excimer lasers, free electron lasers, and others. Lab included. PREREQUISITE: Senior standing in LEOT or permission of instructor.

LEOT-420 — WAVE OPTICS 4 credits
Three major topics are studied in this course: wave optics, properties of light and matter, and the optics of transformations. The majority of the course is dedicated to wave optics and the study of diffraction and interference. In dealing with the properties of light and matter, polarization and optical boundaries are discussed. The optics of transformations deals with Fourier transform spectroscopy, transfer functions, optical data processing, and holography. Laboratory exercises will closely parallel classroom discussions and should help bridge the gap between theory and practical use of the concepts expressed. Senior standing and LEOT-320, LEOT-330. Honors component available.

LEOT-425 — INDUSTRIAL LASER APPLICATIONS 4 credits
This course deals with the applications of lasers in industry. Among the many different uses of lasers to be studied are laser welding and surface treatment, material removal, laser marking and etching, non-destructive testing, distance measurement, lasers in

medicine and surgery, lasers in construction, spectroscopy, communications and others. Lab included. PREREQUISITE: Senior standing in LEOT or permission of instructor.

LEOT-435 — FIBER/INTEGRATED OPTICS 4 credits
This course will discuss elements of fiber and integrated optics including: fiber optic components and systems, waveguide transmission, fiber optic sensors, integrated optics, and optical circuitry. Also included will be fiber splicing, coupling, and measurements. Lab Included. PREREQUISITE: Senior standing in LEOT or permission of instructor.

LEOT-439 — OPTOELECTRONICS 4 credits
This course offers a detailed discussion of optoelectronic fundamentals. Subjects to be covered include: radiation and radiometry, photometry, phototransistors, photoresistors, optoisolators, detectors, semiconductor lasers, display devices, and optical waveguide. Lab included. PREREQUISITE: Senior standing or permission of instructor.

LEOT-442 — OPTICAL COMPONENT FABRICATION AND ASSEMBLY 4 credits
This course deals with the opto-mechanical aspects of optical systems. Topics include processes in the design and mounting of optical components, specifications, constraints and tolerances, materials and substructures, environmental influences, experimental modeling and system evaluation. Lab included. PREREQUISITE: Senior standing in LEOT or permission of instructor.

LEOT-451 — ADVANCED TOPICS IN LASERS 4 credits
This course will introduce the student to advanced topics such as holography, interferometry, precision optical testing, optical computing and pattern recognition. As the field of lasers rapidly evolves, new technologies will be introduced to keep the student abreast of the state of the art in the laser industry. Guest speakers and industry tours will supplement the classroom lectures, and students will be required to pursue individual areas of interest culminating in an in-depth research paper and presentation. Three hours lecture. A lab is required.
PREREQUISITES: LEOT-322, LEOT-375; CO-REQUISITE: LEOT-451L.

LEOT-465 — SENIOR PROJECTS IN L.E.O.T. 3 credits
This capstone course is designed to combine the concepts, theories, and practices developed throughout the course of study in the ESET program, and apply them to the development of a group project. Students will be required to keep a notebook and make weekly written progress reports and monthly oral presentations of their work. A final written report and oral presentation will be required. The lecture will deal with subjects relevant to project research and presentation. The five lab hours will provide the students time to develop their project. PREREQUISITES: students must be candidates for graduation in May, or permission from the instructor; WRIT-202, ESET-355, ESET-370; COREQUISITE: LEOT-465L

Law Enforcement/Criminal Justice

LECJ-100 — CRIMINAL PROCEDURES 1 3 credits
To familiarize the student planning a career in law enforcement with the constitutional requirements and safeguards attendant throughout the criminal process, from investigation through arrest, interrogation, indictment, trial, and sentencing. Included is an

in-depth review of the bill of rights and its influence in modern society. Heavy emphasis is placed on actual case study and review of recent Supreme Court decisions, especially as related to practical situations and problems confronting law enforcement personnel. Selected readings focus on practical application of constitutional principles to practical situations.

LECJ-110 — INTRODUCTION TO CRIMINAL JUSTICE 3 credits
An introduction and basic survey of criminal justice and the court systems, both state and federal. The course explores the concept of bail, the functions and roles of the judge, prosecutor, grand jury, defense attorney, and public defenders, and sentencing in the courts. Also examined are the functions and objectives of the probation officer and parole officer, especially as related to rehabilitation of the offender. The role of the policeman in modern society is discussed and explored in detail.

LECJ-200 — CRIMINAL PROCEDURES 2 3 credits
Continuation of Criminal Procedures 1 LECJ-100. PREREQUISITE: Criminal Procedures 1 LECJ-100.

LECJ-230 — CRIMINAL EVIDENCE 3 credits
An analytical study of the rules of evidence, including such general areas as relevancy and materiality, hearsay evidence, introduction of writings, competency and privilege, and parole evidence rule. Probative matter legally presented at the trial of a criminal case is given special attention. Also examined are rules concerning the admission of evidence in such specific areas as search and seizure, pre-trial identification, admission of confessions, electronic surveillance, presumptions and privileges. PREREQUISITES: Intro. to Criminal Justice LECJ-110 or permission of Department Chairperson.

LECJ-300 — CRIMINAL LAW 1 3 credits
This course explores and examines the substantive law of crimes, including the general and special areas of criminal laws. Of special interest is a survey of crimes against the person, crimes against property, parties to crimes, defenses based on justification, and the nature of the criminal act and conduct. Emphasis is placed on analysis of elements of particular crimes, offenses, and punishments through an examination of the statutes and case example. PREREQUISITE: LECJ-100, LECJ-110, and LECJ-200 or permission of the Department Chairperson.

LECJ-340 — CRIMINAL INVESTIGATION 3 credits
An introduction to field investigation, including conduct at the scene of the crime, interviewing and interrogation of witnesses and suspects, the use of informants, and techniques of surveillance. Emphasis is placed on special investigative techniques and on court procedures of the police case.

LECJ-400 — CRIMINAL LAW 2 3 credits
Continuation of Criminal Law 1 LECJ-300. PREREQUISITES: Criminal Law 1 LECJ-300 and Intro. to Criminal Justice LECJ-110 or permission of Department Chairperson.

LECJ-411 — JUVENILE PROCEDURES 3 credits
This course examines the role of the police in delinquency prevention and the make-up of youth service division within the police department. Emphasis is on theory, administration, control, treatment, confinement, community resources, relationships with the public and the juvenile court.

LECJ-413 — PAROLE, PROBATION AND REHABILITATION 3 credits
This course familiarizes the student planning a career in law enforcement with laws, rules, and regulations attendant with probation and parole and corrections, as well as

with the basic concepts and mechanics of each. The course also examines the organizational structure of probation, the parole board, and the Department of Correction in Massachusetts. Theories employed in the sentencing and rehabilitation of different kinds of offenders will be studied, along with an analysis of rehabilitation of the offender in the community versus in penal institutions. Utilization and effectiveness of work-release programs, halfway houses and treatment centers for drug offenders and alcoholics will be considered.

LECJ-450 — LAW ENFORCEMENT MANAGEMENT & PLANNING 3 credits
Consideration of police problems at the administrative level, including coordination of all branches of a police department. An evaluation of line, staff, and auxiliary functions and the interrelationship of each. The purpose, need, and scope of planning in the police operation, including staffing, correction of data and use of data processing.

LECJ-475 — LAW ENFORCEMENT SEMINAR 3 credits
This course reviews and correlates all major areas of study covered in the law enforcement/criminal justice curriculum. Through general discussion and selected readings, the course explores and re-examines all major areas in law enforcement with the aim of consolidating previously attained knowledge and skills. The course seeks to provide the student with a distinct perception, overview and evaluation of the criminal justice process, including the basic trial format and courtroom procedure.

Liberal Arts Transfer

EDUC-320 — FOUNDATIONS OF EDUCATION: URBAN PERSPECTIVES 3 credits
The objective of this class is to provide students with an introduction to the social, political, and economic conditions of contemporary urban schools such as inclusion, ability grouping, bilingual education, tracking, teaching education, and multi-cultural education. The future of urban education and alternative approaches will also be explored. Class assignments and participation in group discussions will facilitate critical thinking and develop an understanding of the American urban educational experience. PREREQUISITE: ENGL-100

Management
(*See* Business Administration)

Marketing
(*See* Business Administration)

Massage Therapy

(*See* Integrative Health Care)

Math and Natural Sciences

(*See* Engineering Transfer, Computer Science Transfer, Biological Sciences, Chemistry, Mathematics, Physics)

Mathematics

ARTH-074 — PRE-ALGEBRA BILINGÜE 3 créditos

Mismo contenido que el curso ARTH-071, ARTH-072, ARTH-073. El concepto de los números enteros y del valor notacional. Suma, resta, multiplicación y división de numeros enteros. Exponentes, raíces cuadradas perfectas, números primarios y compuestos y factorización prima. Fracciones y decimales. Suma, resta, multiplicación y división de amobs fracciones y decimales. Cambiar por cientos a fracciones y fracciones a por cientos. Introducción a radicales. Perímentros y áreas de rectángulos y círculos. Introducción a algebra. Este es en curso de desarrollo. Los creditos de este curso no contaran hacia el cumplimiento de los requisitos de graduacion de STCC. REQUISITO PREVIO: ninguno.

ARTH-078 — LECTURE PRE-ALGEBRA 3 credits

Same course content as ARTH-071, ARTH-072, and ARTH-073, with the exception that this course is taught using a lecture rather than an audio-tutorial approach. This is a developmental course. Credit for this course will not be counted toward fulfilling graduation requirements at STCC. PREREQUISITE: None.

ALGB-084 — ALGEBRA 1 ELEMENTAL BILINGÜE 3 créditos

Mismo contenido que el curso ALGB-081, ALGB-082, ALGB-083. Repaso de Aritmética, integrales, y simplificación de expresiones algebraicas. Resolviendo ecuaciones lineales y desigualdades. Exponentes y notación científica, polinomios, operaciones con polinomios y factorización de trinomios. Expresiones racionales y resolver expresiones racionales. This is a developmental course. Credit for this course will not be counted toward fulfilling graduation requirements at STCC.REQUISITO PREVIO: ARTH-074 o colocación en ALGB-081.

ALGB-087 — LECTURE INTR. ALGEBRA 1 3 credits

This course is a lecture alternative to ALGB-081—ALGB-083. Three hours lecture. This is a developmental course. Credit for this course will not be counted toward fulfilling graduation requirements at STCC. PREREQUISITES: ARTH- 073, ARTH-078 or math placement of ALGB-081.

ALGB-094 — ALGEBRA 2 ELEMENTAL BILINGÜE 3 créditos

Mismo contenido que el curso ALGB-091, ALGB-092, ALGB-093. Gráfica de ecuaciones lineales y desigualdades de una y dos variables, inclinación, ecuaciones lineal y

sistemas de ecuaciones lineales. Raices, radicales, ecuaciones cuadráticas y sus aplicaciones, y parábolas. Repaso del material de ALGB-084. El cumplimiento de este curso indica que el estudiante está preparado para pasar a pre-cálculo (matemáticas a nivel universitario). This is a developmental course. Credit for this course will not be counted toward fulfilling graduation requirements at STCC. REQUISITO PREVIO: ALGB-084 o colocación en ALGB-09l.

ALGB-097 — LECTURE ELEM. ALGEBRA 2 3 credits
This course is a lecture equivalent to ALGB-091—ALGB-093. Three hours lecture. Equivalent to ALGB-094. This is a developmental course. Credit for this course will not be counted toward fulfilling graduation requirements at STCC. PREREQUISITES: ALGB-083, ALGB-087 or math placement of ALGB-091.

ALGB- 099/MATH-100 — ELEMENTS OF MATHEMATICS
There are 9 self-paced tutorial credits in the ALGB-099 series (ARTH-071 – MATH-107.) This is a developmental course. Credit for this course will not be counted toward fulfilling graduation requirements at STCC. Topics covered are as follows:

ARTH-071 — PRE-ALGEBRA 1 non-gradiation credit
Topics include whole numbers and the place value system, operations of whole numbers, and order of operations. Additional topics include fractions and mixed numerals, operations with these numbers, and applications. This is a developmental course. Credit for this course will not be counted toward fulfilling graduation requirements at STCC. PREREQUISITE: None

ARTH-072 — PRE-ALGEBRA 1 non-graduation credit
Topics include decimal notation, percent notation, and conversions between fractional and percent notation. Ratio and proportion, applications, and problem solving are also included.This is a developmental course. Credit for this course will not be counted toward fulfilling graduation requirements at STCC. PREREQUISITE: ARTH-071 or equivalent

ARTH-073 — PRE-ALGEBRA 1 non-graduation credit
Topics include basic statistical measures, units of linear measurement — American and metric systems — and geometric formulas and applications. Also included is an introduction to algebra, including the real number system and operations of integers. This is a developmental course. Credit for this course will not be counted toward fulfilling graduation requirements at STCC. PREREQUISITE: ARTH-072 or equivalent.

ALGB-081 — INTRODUCTORY ALGEBRA 1 1 non-graduation credit
Topics include a review of arithmetic, the real number system, operations of real numbers, and simplification of algebraic expressions. This is a developmental course. Credit for this course will not be counted toward fulfilling graduation requirements at STCC. PREREQUISITE: ARTH-073, ARTH-078, or placement of ALGB-081

ALGB-082 — INTRODUCTORY ALGEBRA 1 1 non-graduation credit
Topics include solving equations and inequalities, applications and problem solving, and graphs of linear equations. This is a developmental course. Credit for this course will not be counted toward fulfilling graduation requirements at STCC.PREREQUISITE: ALGB-081

ALGB-083 — INTRODUCTORY ALGEBRA 1 1 non-graduation credit
Topics include exponents and scientific notation, operations of polynomials, and

factoring polynomials. This is a developmental course. Credit for this course will not be counted toward fulfilling graduation requirements at STCC.PREREQUISITE: ALGB-082

ALGB-091 — INTRODUCTORY ALGEBRA 2 1 non-graduation credit
Topics include factoring polynomials, solving quadratic equations, and applications and problem solving. Additional topics are operations with rational expressions, solving rational equations, formulas, and simplifying complex rational expressions. This is a developmental course. Credit for this course will not be counted toward fulfilling graduation requirements at STCC. PREREQUISITE: ALGB-083, ALGB-087, or placement of ALGB-091

ALGB-092 — INTRODUCTORY ALGEBRA 2 1 non-graduation credit
Topics include graphing linear equations, slopes, equations of lines, and graphing inequalities in two variables. Additional topics are systems of linear equations, applications and problem solving. This is a developmental course. Credit for this course will not be counted toward fulfilling graduation requirements at STCC. PREREQUISITE: ALGB-091

ALGB-093 — INTRODUCTORY ALGEBRA 2 1 non-graduation credit
Topics include rational expressions and equations and applications. Additional topics are the quadratic formula, graphs of quadratic equations, and functions. This is a developmental course. Credit for this course will not be counted toward fulfilling graduation requirements at STCC. PREREQUISITE: ALGB-092

MATH-117 — CONTEMPORARY MATHEMATICAL APPLICATIONS 3 credits
This is designed to be an applications course for certain technologies. The emphasis is on solving real-world problems pertaining to those technologies by applying arithmetic, algebraic, and geometric concepts previously learned. Utilizing the TI-30X scientific calculator to solve problems involving SI metrics, unit analyses, formulas, and mensuration will also be covered. Restricted to: Landscape, Construction Management, Graphic Arts, and Energy Systems students ONLY. It is not intended for students planning to transfer to a four-year institution. PREREQUISITE: ALGB-087 or placement of ALGB-091 or higher

MATH-122 — APPLIED MATHEMATICS 1 3 credits
Topics include a review of algebra; linear equations and inequalities, matrices, systems of equations; linear programming; and probability. PREREQUISITES: ALGB-093, ALGB-097 or math placement of MATH-101.

MATH-124 — MATHEMATICS FOR A TECHNICAL SOCIETY 3 credits
This course is designed primarily for General Studies and Liberal Arts Transfer students. It is intended to provide a background in the contemporary applications of mathematics to a wide variety of problems. There is an attempt to bring the excitement of contemporary mathematical thinking to the non-specialist, to develop the capacity to engage in logical thinking, and to read critically the technical information whch is abundant in contemporary society. Students will use mathematical models to solve problems in three broad areas: management science, statistics: the science of data, and social choice and decision-making. PREREQUISITES: ALGB-093, ALGB-097 or math placement of MATH-101.

MATH-126 — EXPL. FOUNDATIONS/MATHEMATICAL REASONING 3 credits
The goal of this course is to give students the content base and problem-solving skills necessary to teach elementary school mathematics, as defined by the Massachusetts State Frameworks and the National Council of Teachers of Mathematics. Explorations

of mathematical reasoning and problem solving. Topics will cover two of the strands from the Massachusetts State Frameworks: 1) number systems; and 2) patterns, functions, and algebra. PREREQUISITE: ALGB-097. Restricted to EDUC.AA majors.

MATH-127 — MATHEMATICAL EXPLORATIONS 3 credits
The goal of this course is to give students the content base and problem-solving skills necessary to teach elementary school mathematics as defined by the Massachusetts State Frameworks and the National Council of Teachers of Mathematics. Topics include analyzing data, using probability principles, construction of histograms, combinatorics, development of the concept of measurement and Euclidean properties in 2 and 3 space, and elementary trigonometry. PREREQUISITE: Successful completion of ALGB-097 with a C- or better, or placement into college-level mathematics. Restricted to EDUC.AA majors.

MATH-132 — TECHNICAL MATHEMATICS 1 4 credits
First of a two-part sequence for technology students in a math-related field. Topics include ratio, proportion, variation, fractions, fractional equations, functions and graphs, right triangle trigonometry, vectors, solution of linear equations, determinants, factoring, algebraic functions, laws of sines and cosines, graphs of trigonometric functions and complex numbers. PREREQUISITE: ALGB-093, ALGB-097 or math placement of MATH-101.

STAT-142 — STATISTICS 3 credits
Descriptive methods of collecting, organizing, analyzing, and presenting categorical and numerical data. Elementary probability theory, estimation, and hypothesis testing. This course is transferable to four-year colleges. PREREQUISITE: ALGB-093, ALGB-097 or math placement of MATH-101.

MATH-145 — PRECALCULUS MATHEMATICS 4 credits
An intensive one-semester integrated review of the algebraic and trigonometric concepts necessary for calculus using a functional approach. Algebraic topics include linear, quadratic, polynomial, rational, and inverse functions. Transcendental topics include trigonometric, inverse trigonometric, exponential, and logarithmic functions. Graphing is emphasized as an aid to the visualization of the various functions. Conic sections are introduced. PREREQUISITE: MATH-132, MATH-103, or math placement of MATH-105.

MATH-155 — CALCULUS 1 4 credits
Topics include straight line, conic sections, inequalities, functions and graphs, limits and continuity, differentiation of algebraic and trigonometric functions, maxima/minima theory, related rates and differentials, introduction to integration. Computer labs illustrating basic concepts are an essential part of the course. PREREQUISITE: MATH-232, MATH-250, math placement of MATH-107, or permission of department chairperson.

MATH-157 — CALCULUS FOR BUSINESS, LIFE, AND SOCIAL SCIENCES 1 3 credits
Introduction to calculus with applications to business, life, and social sciences. Functions and graphs, limits, the derivative, techniques of differentiation, curve sketching, maximum/minimum problems, exponential and logarithmic functions, exponential growth and decay. PREREQUISITES: ALGB-097, ALGB-093 or placement at MATH-101 or higher.

MATH-170— PROGRAMMING WITH MATHEMATICA 1 credit
This is a one-credit lab course in programming with Mathematica software, offered during intersession in January. The focus is on hands-on learning, with the primary

goal of setting up and solving significant applied problems with Mathematica. 15 hours lab. PREREQUISITE: MATH-155

MATH-222 — APPLIED MATHEMATICS 2 3 credits
Topics include limits; rates of change; differentiation of algebraic, logarithmic, and exponential functions: applications of the derivative; definite and indefinite integration; applications of the definite integral. PREREQUISITE: MATH-122.

MATH-232 — TECHNICAL MATHEMATICS 2 4 credits
Logarithms, systems of nonlinear equations, inequalities, variation, progressions, trigonometric identities and equations, inverse trigonometric functions, analytical geometry, introduction to differential and integral calculus. PREREQUISITE: MATH-132.

MATH-255 — CALCULUS 2 4 credits
Applications of definite integral; differentiation and integration of transcendental functions; techniques of integration including trigonometric substitutions, integration by parts, methods of partial fractions and completing the square: hyperbolic functions, L'Hospital's Rule, improper integrals, infinite sequences and series, power series. Taylor series. Computer labs illustrating basic concepts are an essential part of the course. PREREQUISITE: MATH-155 or its equivalent.

MATH-257 — CALCULUS FOR BUSINESS, LIFE, AND SOCIAL SCIENCES 2 3 credits
Continuation of MATH-157. Elementary techniques of integration, introduction to differential equations, applications to several mathematical models in business, life, and social sciences, and partial derivatives. PREREQUISITE: MATH-157.

MATH-300, 301, 302 — TEACHING EXPERIENCE IN MATHEMATICS 1, 1, 1 credit
This course will provide STCC students with an opportunity to be a Teaching Assistant in the Springfield elementary and middle schools. Principles of instructional design, instructional methods, instructional technology and models of assessment will be covered in a seminar format before students teach their lesson. In addition, students will be experiencing mathematics in an active learning process in school classrooms in a supervised and structured experience. PREREQUISITE: Permission of instructor or ALGB-097

MATH-355 — CALCULUS 3 4 credits
Topics include polar coordinates, multivariable calculus: 3-dimensional coordinate systems and surfaces from Rn to Rm; limits and continuity; partial differentiation; chain rule; the gradient: directional derivatives; maxima and minima; multiple integration and applications; vector calculus: line integrals, surface integrals; Green's Theorem; Divergence Theorem; Stroke's Theorem. Computer labs illustrating basic concepts are an essential part of the course. PREREQUISITE: MATH-255 or its equivalent.

MATH-376 — DISCRETE STRUCTURES 4 credits
This course is a study of the discrete structures of mathematics. They include propositional calculus, quantification, sets, functions, sequences and series, number theoretic functions, proofs - direct and indirect, induction, combinatorics, discrete probability, recurrence relations, equivalence relations, partial orderings, graphs, paths, and finite state machines. Four hours of lecture. PREREQUISITE: MATH-255.

MATH-439 — LINEAR ALGEBRA 3 credits
Geometric vectors; vector spaces, systems of linear equations; inner product spaces; linear transformations and matrices; determinants; eigenvalues and eigenvectors. PREREQUISITE: Calculus 2 MATH-255 or permission of instructor.

MATH-440 — LINEAR ALGEBRA LABORATORY 1 credit
This is a one-semester-hour computer laboratory illustrating applications of linear algebra and using a computer algebra system. PREREQUISITE: MATH-255, COREQUISITE: MATH-439.

MATH-455 — DIFFERENTIAL EQUATIONS 4 credits
Classical methods of solution of first order and linear higher order ordinary differential equations. LaPlace Transform and Power Series solutions of linear ordinary differential equations. Matrix solutions to linear systems of ordinary differential equations. Numerical methods of solution of first order ordinary differential equations using the digital computer. Computer labs illustrating basic concepts are an essential part of the course. PREREQUISITE: MATH-355 (or MATH-255 with permission of instructor).

Mechanical Engineering Technology

MECH-100 - INTRODUCTION TO COMPUTER-AIDED DRAFTING 3 credits
This course is intended to provide the student who has no previous computer or drafting background with the necessary foundation to begin the CAD courses at STCC. The course begins with the terminology and basic Windows operating system. Students develop an understanding of computer hardware, manipulating windows, and file management. The course then provides instruction in drafting basics for mechanical applications. Topics include the multiview system of a drawing, selection and arrangement of orthographic views, auxiliary views, sectional views, detail views, and conventional drawing practices. In addition, line and lettering practices are covered for typical drafting standards. PREREQUISITE: None

MECH-110 — MATERIALS AND PROCESSING FOR WORLD-CLASS MANUFACTURING 3 credits
This course is designed to provide the student with knowledge of the various manufacturing processes. The course begins with an intensive study of materials, including structural properties, and heat treatment of ferrous and non-ferrous materials. Also investigated will be non-metal materials such as plastics and composites. Material selection criteria are emphasized. Other related topics include: castings, forgings, progressive dies, powder metallurgy, welding, and non-traditional machining operations. Students will develop an understanding of why various manufacturing processes are used, and the advantages of the different processes.

MECH-115 — INTRODUCTION TO ENGINEERING TECHNOLOGY 3 credits
This course is an introduction to the concepts of engineering and engineering technology. The major topic to be discussed is the role that an engineering technologist plays in developing and manufacturing a world-class product. Some of the critical skills required of the technologist are problem solving, teamwork, business communication, and effective writing. The student will be introduced to these skills and will learn to apply them to the basic concepts of product design and quality concepts associated with a manufacturing enviornment. Use of computer application software to solve problems in engineering technology will be emphasized. The focus will be on continuous improvement methods brought about by the computer. The student will become familiar with using spreadsheets, word processing, presentation software, and other

software for various industrial and manufacturing problems related to industrial environments. Team projects in conjunction with lab assignments are designed to reinforce key engineering principles. Three lab hours. COREQUISITE: MECH-115L

MECH-150 — FUNDAMENTALS OF CNC 3 credits
This course is an introduction to the fundamental concepts of Computer Numerical Control (CNC). The importance of numerical control to manufacturing and productivity is discussed with respect to different types of CNC systems. Coverage includes writing simple programs to perform contouring and hole operations for typical milling machining centers. Programs will also be written for lathe operations including turning, facing, and threading. The student will be instructed in the set-up and operation of both a CNC mill and lathe. Emphasis is placed on developing an understanding of typical G and M codes used in modern CNC machinery. Throughout the course, students will be required to perform calculations for speeds and feeds for various tooling. In addition, students will calculate the necessary coordinate data as it relates to the Cartesian coordinate system. PREREQUISITE or COREQUISITE: ALGB-087

MECH-170 — FUNDAMENTALS OF AUTOCAD 3 credits
The purpose of this course is to instruct the student in the terminology, capabilities, and operation of computer-aided drafting software using a typical CAD system. The student will be given graphic laboratory problems to create work files consisting of elementary drawings using typical CAD commands such as line, rectangle, circle, arc, and blocks. Editing of CAD drawings is emphasized including scaling, rotating, and copying. In addition, dimensioning using dimension styles is presented to enhance the student's ability to produce professional quality drawings. PREREQUISITE: None

MECH-180 — CAD 1: 2D FUNDAMENTALS 2 credits
The purpose of this course is to instruct the student with the terminology, capabilities, and operation of computer-aided drafting software using a typical CAD system. The student will be given graphic laboratory problems to create two-dimensional work files. Coverage includes topics such as creating template drawing formats utilizing paper space and model space. In addition, dimensioning using dimension styles is presented to enhance the student's ability to produce professional quality drawings. Two hours of lecture. CO-REQUISITE: MECH-180L.

MECH-181 — ENGINEERING DRAWING PRACTICES 2 credits
The purpose of this course is to discuss the requirements for creating orthographic views for item description as described in ASME Y14.3M-1994. Coursework includes the multiview system of a drawing, selection and arrangement of orthographic views, auxiliary views, sectional views, detail views, and conventional drawing practices. In addition, line and lettering practices are covered per ASME Y14.2M-1992. The student will be given graphic laboratory problems to create mechanical drawings by hand and using a typical CAD software package. PREREQUISITE: experience with Windows Operating System and previous CAD experience unless taking MECH-180 concurrently. COREQUISITE: MECH-181L.

MECH-226 — METROLOGY AND GEOMETRICS 3 credits
This course introduces the student to three key concepts within the quality function: the metrology system, measuring and gauging, and geometric dimensioning and tolerancing (GD&T). Topics to be discussed include managing the metrology system, calibration procedures and standards, types of measuring equipment, instrument classification, analysis and presentation of measurement data, and measuring and gauging geometric tolerances. Emphasis is placed on GD&T theory and discussions, based on ANSI Y14.5M-1994, including measurement of flatness, straightness, roundness,

cylindricity, parallelism, perpendicularity, concentricity, position, and runout. Lab exercises demonstrate key principles discussed in lecture.

MECH-230 — CAD LEVEL 1 3 credits
The purpose of this course is to introduce the student to the terminology, capabilities, and operation of computer-aided drafting software using AutoCAD as a typical CAD program. Mechanical drafting fundamentals of orthographic project, linestyles, sectioning, and assemblies are covered. The student will be given graphic laboratory problems to create work files consisting of elementary mechanical drawings utilizing CAD commands such as line, rectangle, circle, arc, and ellipse. Editing of CAD drawings is emphasized including scaling, rotating, and copying. PREREQUISITE: None

MECH-250 — CNC APPLICATIONS 3 credits
This course is a continuation of Fundamental Concepts of Computer Numerical Control (CNC). The course begins with a review of writing programs for a CNC mill and lathe. Students will analyze and write CNC programs of increased complexity with emphasis placed on trigonometry required for coordinate data. The concepts of Computer Aided Manufacturing (CAM) will be introduced. Students will take CAM files created by the senior CAM 2 class and download, setup, edit if necessary, and create the parts. PREREQUISITE: MECH-150, and MATH-132 (MATH-132 may be taken concurrently)

MECH-280 — CAD 2: 3D FUNDAMENTALS 4 credits
This course studies three-dimensional solid modeling using a feature-based, parametric, solid modeling CAD system. Students learn how to create mechanical objects using parametric, associative software. The engineer sketches each feature of a part, provides dimensions and constraints to tie the features together, then extrudes or revolves the sketch into a solid object. Orthographic drawings are created automatically from the part design, including isometric, auxiliary, and section views. The design is associative, meaning the part and drawing always reference each other. Drilled, counterbored, and countersunk holes are added parametrically. Three hours of lecture. PREREQUISITE: MECH-180, MECH-181; CO-REQUISITE: MECH-280L

MECH-324 — STATICS AND STRENGTH OF MATERIALS 4 credits
This course begins by studying the fundamentals of static equilibrium. Topics included are resultants of force systems, tension and compression, moments, and shear and bending moment diagrams. The course then proceeds to the study of stress and strain as produced by the application of forces on beams, columns, and shafts. The calculations of centroids and moments of inertia of beam cross-sections are emphasized. The influence of material selection on shear, bearing, bending, and torsional stresses is emphasized. Also included is the analysis of beam and torsional deflections including thermal deformation. PREREQUISITE: MATH-132.

MECH-327 — QUALITY CONCEPTS 3 credits
This course covers the evolution, current trends, and future direction of the quality initiatives that support a world class manufacturing organization. Topics to be discussed include quality terms, concepts, and principles; quality benefits, philosophies and modes; and continuous improvement concepts and tools. Discussion will include key theories of Shewhart, Deming, Juran, Crosby, Feigenbaum, and Ishikawa with respect to their philosophies and implementation strategies. Different models of implementation such as ISO 9000, QS 9000, and the Malcolm Baldrige quality award will be studied. Continuous improvement techniques relating to human resources and motivational theory, inspection and testing, NCM cycle, calibration, auditing, and methods and techniques used in statistical process control (SPC) will be discussed. Lab exercises utilizing Microsoft Excel are designed to demonstrate key principles discussed in lecture. Two hours lecture. PREREQUISITE: MECH-115; COREQUISITE: MECH-327L.

MECH-331 — STATISTICAL QUALITY CONTROL 3 credits
This course concentrates on methods and techniques utilized in statistical process control (SPC) in controlling manufacturing processes. SPC is a primary prevention strategy used in process problem-solving and in monitoring of processes. Topics for discussion include descriptive and predictive statistics, data cycle, process variability model, histograms, statistical parameters, normalized statistic, common cause system, central limit theorem, variable and attribute control charts, control chart interpretation, process capability studies (Cp and Cpk indexes), and special charting techniques. PREREQUISITE: MATH-132

MECH-337 — COMPUTER-AIDED MANUFACTURING 1 (CAM 1) 4 credits
In a laboratory setting, CAM 1 explores machining by utilizing a graphical software package to generate 2D part programs for a CNC mill and CNC lathe. The emphasis of the course is placed on learning to use the CAM software to select tools, enter part geometry, and convert screen graphics into a CNC program. In the first half of the course, students create two-dimensional part programs for milling applications. Turning operations such as ID and OD turning, threading, grooving, and back turning are included in the second half of the course. The student learns how to communicate the program to the machine and manufacture the part. Intensive work is included in editing the graphics to fully utilize the software. In addition, the student will learn the integration of Computer-Aided Design (CAD) with CAM to enhance the understanding of proceeding from the design process through the manufacturing process. PREREQUISITE: MECH-150.

MECH-345 — MACHINE DESIGN 3 credits
This course studies the design, manufacturing, and cost of mechanical elements which, when combined as a machine, perform a specific function. A review of strength of materials is covered, followed by the study of topics such as endurance and fatigue analyses (including the effect of lubrication on mechanical components). The design calculations for shafts, springs, belts, clutches, and chains are included. Selection criteria for bolted and welded connections, ball and roller bearings, and spur, bevel, and worm gears are included. Special emphasis is given to the selection of engineering materials, including cost, machinability, and wear. PREREQUISITE: MECH-322

MECH-350 — MECHANICS OF STATICS 4 credits
Review of right and oblique triangle trigonometry, geometry, numerical accuracy and dimensional analysis. Vector mechanics of forces and moments. Free-body diagrams, couples, resultants, equilibrium of particles and rigid bodies in two dimensions. Friction applications. Centroids, centers of gravity, distributed loads and moments of inertia are included. PREREQUISITE: MATH-132.

MECH-361 — STRENGTH OF MATERIALS 3 credits
The study of stress, strain, and deformation as produced by the application of forces on beams, columns, and shafts. Stress concentrations. Factor of safety. The influence of material selection on shear, bearing, bending, and torsional stresses is covered. Shear and bending moment diagrams, shear and bending stresses in beams. Also included is the analysis of beam and torsional deflections. Deformation due to thermal changes in materials. Four hours lecture. PREREQUISITE: MECH-350

MECH-370 — CAD 3: 3D DESIGN 4 credits
This course is a continuation of 3D Fundamentals. The feature-based, parametric solid modeling CAD system will now be used for assembly modeling. Full assemblies will be created and edited. Exploded assemblies will also be created. The course continually emphasizes mechanical design principles using the CAD system. Special attention is given to tolerancing of mating parts and the application of geometric toler-

ances per ASME Y14.5M-1994. Multiple versions of design assemblies are linked to a spreadsheet. A casting is extracted from the assembly with emphasis on design layout, target points, and draft angles. Three hours of lecture, three hours lab. PREREQUISITE: MECH-270; CO-REQUISITE: MECH-370L.

MECH-390 — MATERIALS AND MANUFACTURING PROCESSES 3 credits
This course is designed to provide the student with knowledge of engineering materials and manufacturing processes. The course begins with a study of materials including structural properties and heat treatment of ferrous and non-ferrous materials. Also investigated will be non-metal materials such as plastics and composites. Material selection criteria are emphasized. Students will develop an understanding of why various manufacturing processes are used, and the advantages of the different processes. Three hours lecture. PREREQUISITES: ALGB-097 with minimum grade of C, MECH-180, MECH-115.

MECH-418 — AUTOMATED SYSTEMS LAB 3 credits
An intensive, lab-oriented course designed to familiarize students with automated robotics used in the CIM environment. Students will learn to integrate robotics with computer numerical control machines. Students will develop flexible manufacturing cells. The emphasis will be placed on CNC processing stations, loop conveyor system, material handling, and vision cameras used for part inspection. PREREQUISITES: MECH-110, MECH-337.

MECH-420 — FLUID MECHANICS 3 credits
This course includes a comprehensive study of hydrostatics, principles governing fluids at rest, pressure measurement, hydrostatic forces on submerged areas and objects, fluid flow in pipes under pressure, fluid energy, power, friction losses, Bernoulli's Theorem, and flow measurement. Application of these principles to the operation or control of fluid power equipment is also covered. PREREQUISITE: MECH-221.

MECH-427 — ADVANCED QUALITY CONCEPTS 4 credits
This course, a continuation of MECH-327, introduces more advanced quality concepts to the student. Such topics as quality manuals, process control plans, sampling plans, reliability, and design of experiments will be discussed. The student will continue using Microsoft Excel, but will incorporate some of Excel's advanced features as part of the laboratory exercises that are designed to demonstrate key principles discussed in lecture. PREREQUISITE: MECH-327

MECH-437 — CAM 2 4 credits
CAM 2 continues the technology learned in CAM 1 by utilizing a graphical software package to generate 3D part programs for a CNC mill. In the first half of the course students create part programs of increased complexity by using solids created in CAD. The course then proceeds with a discussion of 3D workplanes, including construction of user-definable work planes. Students will learn how to draw defining geometry on layers, followed by the 3D commands needed to create swept and sculpted surfaces. Four- and five-axis machining is also included. Advanced features such as surface trimming and blending are also covered. Creating and editing macros are introduced to facilitate creating a family of parts. PREREQUISITE: MECH-337

MECH-442 — MANUFACTURING PLANNING AND CONTROL 3 credits
Manufacturing environments are controlled by a number of systems. This course is intended to describe the various systems that could be in use in modern manufacturing. We will investigate production and inventory management techniques as prescribed by APICS. The course includes a study of the elements that contribute to a successful production control program. Production forecasting, product development, control of

materials, master scheduling, capacity planning, routing, dispatching, and follow-up are studied in terms of their significance and their relationship to effective manufacturing control. The philosophy of MRP2 will be discussed to show the interrelationship with JIT, quality improvements activities, and SPC.

MECH-447 — TOTAL QUALITY MANAGEMENT 2 credits
This course addresses the principles and practices within TQM processes. Key theories of Shewhart, Deming, Juran, Crosby, Feigenbaum, and Ishikawa are discussed and compared with respect to their philosophies and implementation strategies. The course will focus on Deming's 14 points and Crosby's absolutes of quality and 14 steps to quality improvement. Topics for discussion include root cause analysis, measuring to improve, performance measurement, teamwork, mistake-proofing, process management, cause and effect analysis, benchmarking, prevention systems, and strategies to achieve continuous improvement. PREREQUISITES: MECH-327, MECH-331

MECH-455 — CAD LEVEL 4 3 credits
CAD Level 4 continues three-dimensional functions with parametric and associative modeling of mechanical parts. The emphasis of the course is to create assembled products and all detail drawings required to manufacture the product. Advanced concepts in AutoCAD Designer are covered, such as material properties and exploded views. Pro/Engineer, an advanced parametric associative software package, is utilized to take the students' fundamental understanding of modeling to a higher level. PREREQUISITE: MECH-435

MECH-466 — ADVANCED CAD APPLICATIONS 3 credits
This course advances beyond the standard AutoCAD environment by exploring the concepts of customizing. Customizing includes creating menu macros and learning AutoLISP, AutoCAD's internal programming language. Menu macros and AutoLISP programming allow the user to create custom commands in order to automate frequently used, labor intensive routines. PREREQUISITE: MECH-180.

MECH-467 — ADVANCED ENGINEERING APPLICATIONS 3 credits
This course studies computer solutions to engineering problems, with emphasis on graphical software applications relevant to mechanical engineering technology students. Includes the development of problem-solving algorithms, along with exposure to a programming language. Two hours lecture, three hours lab. PREREQUISITIES: MECH-115, MECH-180.

MECH-470— INTRODUCTION TO PRO/ENGINEER 3 credits
The application software used in this course is Pro/Engineer by Parametric Technology Corporation. It is a feature-based CAD software package. Pro/Engineer can elevate a student's understanding of the design process to a higher level. Three-dimensional functions are covered for mechanical parts, including both parametric and associative modeling techniques. The course is focused on the design process for creating 3D parts, assemblies along with their detail, and assembly drawings along with the required bill of materials, all of which are currently used by industry for product documentation. PREREQUISITE: Experience with Windows OS

MECH-481 — SENIOR PROJECT 4 credits
The goal of this course is to tie together the different concepts of design and manufacturing that have been studied throughout the Mechanical Engineering Technology curriculum. The class will be divided into cross-functional teams. Each team will be given a problem statement and design requirements. The team will plan, design, and manufacture the engineering problem. Each team will prepare a proposal, schedule of tasks, finalized design, finalized manufacturing process, and final report and pre-

sentation. Team designs will be judged, and the best student team design will then be manufactured. Projects vary from semester to semester. Three hours lecture. COREQUISITE: MECH-481L

Medical Assistant

MAST-101 — MEDICAL TERMINOLOGY 1 3 credits
This course will provide students with a foundation to recognize medical terms using the four word part approach (prefix, word root, suffix, combining vowel). This will prepare the student to better understand and master the terminology related to health care delivery. Emphasis will be placed on improving written and oral communication skills pertaining to medical terminology. The student will experience real life applications of medical terminology through the use of pathology, and history and physical forms from actual hospital medical records as well as television medical dramas and movies. A working knowledge of medical terminology is desirable for anyone entering one of the health science fields. PREREQUISITE: None.

MAST-119 — APPLIED LEGAL CONCEPTS *(7 weeks)* 1 credit
This course will introduce the basics of medical law that pertain to the practice of medicine in the ambulatory care areas. Legal responsibilities and the rights of the patient, medical assistant, and physician will be discussed. Upon completion of the course, students will be able to understand the principles of law as they relate to the practice of medical assisting.

MAST-122 — INTRODUCTION TO MEDICAL ASSISTING 3 credits
This course begins with an orientation to the profession of medial assisting. Students wiill explore the art/science of wellness through lecture and discussion highlighting communication skills, stress reduction, values clarification, and ethical conduct as they apply in the health care field. The student will have the opportunity to acknowledge his/her feelings and thoughts; examine attitudes, beliefs, cultural patterns; and clarify his/her own value system as it relates to human sexuality and life's losses. Impact of heredity/environment on one's sense of self-esteem will be examined. The role of the patient educator as well as clinical assistant and administrative assistant will be explored. CONCURRENT: MAST-160.

MAST-160 MEDICAL ASSISTANT TECHNIQUES 1 4 credits
Presents theory and planned student activity in assisting with medical asepsis, vital signs, patient history, physical exam, position and draping, and sterilization and disinfection. Emphasis will be on the performance of these basic skills used by the Medical Assistant. CONCURRENT: MAST-160L, MAST-122.

MAST-161— MEDICAL OFFICE MANAGER 1 1 credit
This course is designed to prepare the Medical Assistant student to develop skills using the Medical Manager software, a popular medical office management program. CONCURRENT: MAST-160

MAST-206 — VENIPUNCTURE/PHLEBOTOMY *(7 weeks)* 1 credit
This course is designed to prepare the Respiratory Care and Radiography students in the venipuncture/phlebotomy procedure for collection of diagnostic blood specimens, and/or instilling contrast medium, diagnostic radiopharmaceuticals, and/or other drugs necessary for diagnostic procedures. Incorporated into the course will be lectures supplemented with on-campus laboratory sessions. CONCURRENT: MAST-206L

MAST-207 — VENIPUNCTURE/PHLEBOTOMY WITH AFFILIATION *(7 wks)*1 credit
This course is formulated to assist and prepare the Nuclear Medicine student with the understanding and specific skills necessary in the performance of venipuncture/phlebotomy procedures to withdraw a specimen of blood for diagnostic testing, as well as instilling a medication, contrast medium or diagnostic radiopharmaceutical. Lectures and on-campus laboratory sessions will be supplemented with hospital laboratory experience aimed at high quality collection of diagnostic blood specimens. CONCURRENT: 207L

MAST-210 — HEALTH SCIENCE 2 3 credits
Presents combined classroom theory and planned student activity in a laboratory setting to prepare the allied health student to perform the following: medical asepsis including isolation techniques, vital signs, body mechanics and patient movement, surgical asepsis, a general understanding of medications, and care of the patient during emergency situations including CPR. CONCURRENT: MAST-210L

MAST-211 — HEALTH SCIENCE 3 *(7 weeks)* 1 credit
Presents theory and practice in classroom and laboratory settings to prepare allied health students for basic clinical skills and life support measures, including CPR. CONCURRENT: MAST-211L

MAST-215 — ELECTROCARDIOGRAPHY *(7 weeks)* 1 credit
A one-credit course focusing on the technique of taking a basic electrocardiogram. Skills will be developed in laboratory sessions. CONCURRENT: MAST-215L

MAST-216 — VENIPUNCTURE/PHLEBOTOMY *(7 weeks)* 1 credit
This course is designed to prepare the Medical Assistant student in the performance of venipuncture/phlebotomy procedures for the preparation and collection of diagnostic blood specimens. Included in the course will be an understanding of intravenous instillation of fluid as well as laboratory practice in removal of intravenous equipment from manikins. Emphasis will be placed on the general rules for safety following Occupational Safety and Health Administration (OSHA) standards and guidelines in the collection of high quality specimens. CONCURRENT: MAST-216L

MAST-218 - LAB PROCEDURES FOR THE MEDICAL ASSISTANT *(7 wks)* 1 credit
This class combines lecture and lab experience designed to introduce the multi-competent health care provider to the clinical laboratory and point-of-care testing. Emphasis will be placed on quality control, the collection and processing of specimens, and performing selected tests that assist with the diagnosis and treatment in various health care settings. One hour lecture, two hours lab. PREREQUISITE: MAST-202; CONCURRENT:MAST-218L

MAST-220 — ADMINISTRATIVE SKILLS/MEDICAL ASSISTANT 3 credits
This course is designed to prepare the Medical Assistant student with theory and skills necessary to perform administrative procedures in a medical office. Students will explore in depth types of insurance, managed care, third party reimbursement guidelines, and HCFA claim form instructions. They will be introduced to ICD-9-CM, CPT, and HCPCS coding systems. Students will perform procedural and diagnostic coding using the appropriate tools such as coding manuals and electronic search engines. Students will also be introduced to accounting procedures for the medical office, including accounts payable and receivable, billing and collection procedures, daysheets, bank deposits, petty cash, preparing checks, posting adjustments and processing refunds. Three hours of lecture.

MAST-260 — MEDICAL ASSISTANT TECHNIQUES 2 4 credits
This course is a continuation of advanced theory and skills in medical assisting techniques. Selected laboratory procedures will include minor surgery, cardiopulmonary resuscitation, emergencies, electrocardiography, injections, and the modalities used in physical therapy. PREREQUISITE: MAST-160; CONCURRENT: MAST-260L

MAST-261 — MEDICAL OFFICE MANAGER 2 1 credit
This course is a continuation of the Medical Manager software program used in the medical office setting, and will enhance the administrative skills needed by the Medical Assistant. CONCURRENT: MAST-260.

MAST-301 — INTRODUCTION TO HUMAN DISEASE 3 credits
This course is designed to acquaint students with the major causes of death in the United States: heart disease, cancer, stroke, and others. The student will become aware of genetic and environmental effects on health. In addition, he/she will learn how to promote his/her own good health, and learn ways of taking charge to help prevent these major diseases from affecting self or family. Emphasis is on the relationship between daily life styles and health as a point of action for health-conscious people.

MAST-319 — DOSAGE AND CALCULATIONS *(7 weeks)* 1 credit
This course will introduce the student to pharmaceutical calculations and provide basic information on the apothecary and metric systems, and conversions from one system to another, based on practical drug problems encountered in clinical practice, since it is the responsibility of those administering drugs to precisely and efficiently carry out medical orders. A review of fractions, decimals, percents, ratios, and roman numerals will be included, emphasizing examples used in the most common medication orders. Learning will be reinforced by computer-assisted problem solving. PREREQUISITE: ARTH-073

MAST-321 — INTRODUCTION TO PHARMACOLOGY *(7 weeks)* 1 credit
This introductory course covers pharmaceutical references and sources, legislation relating to drugs, classifications and actions, trade and generic names of drugs. The course reflects current and commonly used practices, procedures, medications, and drug preparations. Effects of drugs and their side effects on body systems will be explored. COREQUISITE: MAST-319

MAST-450 — MEDICAL ASSISTANT TECHNIQUES 3 *(7 weeks)* 3 credits
The affiliation period of 24 hours per week hours per week offers each student the opportunity to practice the skills learned in the college laboratory in supervised clinical experiences. Various sites in hospital clinics, outpatient laboratories, EKG departments, physician offices, and health maintenance organizations will give the students the best possible background to make career decisions. In addition, the students attend a two-hour review course in preparation for the certification exam. Two hours lecture. PREREQUISITES: MAST-160, MAST-260; CO-REQUISITE: MAST-450L.

MAST-460 — MANAGEMENT SKILLS FOR THE MEDICAL ASST *(7 wks)* 5 credits
This course is a continuation of the affiliation period of 24 hours per week and offers each student the oportunity to be introduced to the responsibilities and duties of the office manager in an ambulatory care setting. These duties include coordination of all office activities, including staff meetings; recruiting and training personnel; implementing time management techniques to boost office efficiency; organizing, updating, and reviewing the procedures manual; developing educational materials and coordinating marketing functions; processing records and financial managment; managing facilities and equipment; establishing risk management protocols; and understanding liability

coverage. In addition, the student will attend a four-hour review course in preparation for the certification exam. The student will also attend a two-hour seminar class to review, re-evaluate, and expand upon the affiliation experience.
PREREQUISITE: MAST-260; CO-REQUISITE: MAST-460L

Medical Office Information Technology
(*See* Information Technologies)

Microcomputer Specialist
(*See* Information Technologies)

Music

MUSC-110 — HISTORY OF MUSIC 3 credits
This course will focus on the history and influence of the western music tradition. Forms and styles of music from the Middle Ages to the present will be examined in relation to the timeline of historical events. Representative works by noted composers will be listened to and discussed. Three hours lecture.
Offered Continuing Education only

MUSC-130 — MUSIC APPRECIATION 3 credits
A survey course for the general student in which significant works from the several periods of music history will be heard and discussed. This course will be open to all students at the College. Outside listening and reading assignments will be scheduled and attendance at live concerts will be encouraged.

MUSC-133 — INTRODUCTION TO PIANO AND THEORY 3 credits
A beginning piano course for adult students without prior musical knowledge or skills. The course will combine both music theory and a laboratory skills program with major emphasis on the basic structure of keyboard music. Melody, chords, rhythm, form, dynamics and style will be studied by the student at the keyboard and discussed in lecture sessions. Students will be encouraged to proceed as their individual abilities permit, requiring considerable individualization of instruction as they gain technical mastery. Open to all students at the College. PREREQUISITES: None.

MUSC- 234 — INTERMEDIATE PIANO AND THEORY 3 credits
A continuation of the introduction to keyboard skills course. Mastery of major and minor scales, arpeggios, and chords in all keys will be taught. The emphasis will be on developing mastery of sight-reading skill, providing the student with skills for further self-exploration of the keyboard upon completion of the program. Course open with the permission of the instructor or satisfactory completion of MUSC-133.

Nuclear Medicine

(*See* Diagnostic Medical Imaging)

Nursing

NURS-099 —BASIC MEDICATION CALCULATIONS 3 credits
This course contains five separate modules: (1) arithmetic review of fractions and decimals, (2) systems of measurement and measurement equivalents, (3) dimensional analysis, (4) nonparenteral drug doses, and (5) parenteral drug dosages. All students will take math placement tests and, based on test results, will be offered the option of challenge exams for the first two modules. Regardless of math placement results, all students must successfully complete the final three modules and receive a grade of 90% or better on the final exam to meet the prerequisites for admission into the nursing program. This is a developmental course. Credit for this course will not be counted toward fulfilling graduation requirements at STCC.

NURS-102 — NURSING 1 8 credits
This is a nursing fundamentals course which provides the student with a knowledge base of nursing theory. The focus is on wellness of the individual client who is presented as a multidimensional being with physical, psychological, sociocultural, developmental, and spiritual facets. Nursing process is introduced and applied to clients across the lifespan, using primary interventions which promote wellness and prevent illness. This course teaches the student beginning communication siills, principles of teaching/learning, professional standards within the practice of nursing, as well as the nurse's role as a member of the health team. The course is intended to introduce the student to critical thinking and to emphasize the importance of lifelong learning. The major concepts identified in this course are nursing knowledge, communications, nursing process, teaching/learning, professional issues, management and personal growth. PREREQUISITE: NURS-099

NURS-202 — NURSING 2 9 credits
This course focuses on clients experiencing common physiological and psychosocial alterations. Emphasis is placed on application of nursing knowledge and utilization of the nursing process in caring for individuals and families acorss the lifespan. The student learns secondary interventions which are intended to promote stability and prevent complications in ill or injured clients. Furthermore,the student learns tertiary interventions which facilitate achievement of maximum levels of wellness following illness or injury. Therapeutic communication skills are taught and the student begins to apply them in interactions with clients, peers, and health team members in selected settings. Teaching and learning is emphasized through implementation of teaching plans for individuals and families. Examination of ethical, legal, and professional standards within nursing practice is intended to enhance professional role development. This course helps the student to achieve organizational skills in the care of individuals and families in selected settings. Also, the student begins to develop skills necessary for self-growth and critical thinking.

NURS-302 — NURSING 3 9 credits
This course focuses on individuals and families across the lifespan who are experiencing multisystem illnesses/injuries. The student is expected to integrate nursing knowledge and skills as well as utilize the nursing process in order to deliver secondary and tertiary interventions to clients with multiple health problems. Therapeutic communication skills are refined through implementation with individuals, families, peers, and health team members. The student will formulate teaching plans aimed at promoting stability, preventing complications, and achieving maximum levels of wellness to clients with multisystem problems. The student further develops his/her role as a professional nurse by differentiating ethical, legal, and professional issues within the realm of nursing. Organizational skills are further enhanced through nursing experiences in a variety of settings including acute care agencies and community placements. The student is expected to demonstrate critical thinking in his/her nursing practice.

NURS-330 — THE ART OF HEALING 3 credits
This course emphasizes the art of healing within the healthcare domain. Students will gain an understanding of the differences between the art and science of healing. They will develop an appreciation of the intuitive side of healthcare and how it complements the scientific base in an effort to provide holistic care to humans. Topics include values clarification, self-awareness, and role development of the health professional, ethical dilemmas, cultural diversity, and alternative health practices. These and other topics will be presented in a seminar format to encourage active learning and critical thinking. Three hours of lecture. PREREQUISITE: ENGL-100.

NURS-402 — NURSING 4 9 credits
This course continues to focus on individuals and families across the lifespan who are experiencing multisystem illnesses or injuries. In addition, groups are introduced in this semester. The student is expected to incorporate nursing theory and knowledge of skills in the care of these clients. In using the nursing process there is an emphasis on synthesizing all facets of the client's needs including health promotion and illness prevention as well as promoting stability, preventing complications, and achieving maximum levels of wellness following illness or injury. The course stresses evaluation of the teaching/learning process with clients. The student learns management skills which allow him/her to coordinate the nursing care of individuals, families, and groups in various settings. The student is encouraged to evaluate professional standards used in interpersonal relationships. Also, the student is expected to communicate effectively with others, use critical thinking, and seek out learning experiences.

NURS-403 — NURSING SEMINAR 2 credits
This seminar course builds upon the curricular threads of management, professional issues, personal growth, and communication. It is designed to stimulate critical thinking skills by allowing the student to discuss and debate various current issues pertinent to nursing. Professional development topics include role transition, legal issues, job-seeking skills, and discussion of ethical dilemmas. This course provides the student with an opportunity to critically analyze experiences and situations in an effort to stimulate personal growth and develop professional skills useful in nursing practice.

Occupational Therapy Assistant

(*See* Rehabilitation Therapies)

Philosophy

PHIL-110 — PHILOSOPHY 1 3 credits
Philosophy is part of the study of the self; the search for reasons for our values and beliefs; and for good reasons for our reasons. The course includes a critical examination of the traditional questions in ethics, politics, religion and art. PREREQUISITE: None.

PHIL-210 — PHILOSOPHY 2 3 credits
This course will examine in greater detail some of the classical problems along with some contemporary problems introduced in Philosophy 1. Students will be required to write one critical essay and one annotated bibliography on assigned readings. This course will feature guest lectures by members of other departments of STCC and outside participants. PREREQUISITE: None.

Physical Education

(*See* Interdisciplinary Health Studies)

Physical Therapist Assistant

(*See* Rehabilitation Therapies)

Physics

PHYS-104 — INTRODUCTION TO ASTRONOMY 3 credits
This course is an introductory, non-technical overview of astronomy taught as a general elective. The subject is presented from both a historical and a descriptive perspective, beginning with the earliest human astronomical observations and continuing through the most recent discoveries about the nature of the universe. Topics discussed will include the origin and age of the universe (the Big Bang); star formation, dynamics and evolution; planet and planetary system formation and a tour of our solar system; the sun; galaxy structure and evolution; and current topics such as the search for extra-solar planets, the potential for the existence of extraterrestrial life, and astronomical threats to life on earth. Some outdoor observations may be conducted. PREREQUISITES: ALGB-083/087 and placement in DRDG-092 and DWRT-099.

PHYS-119 — TECHNICAL PHYSICS 4 credits
An overview of physics in one semester. Trigonometry and use of a scientific calculator are introduced as needed. Mechanics topics include vectors, statics, linear and circular motion, work and energy. Introduction to electric fields and circuits, waves, light, and atomic physics are also treated. Experimentation and problem-solving are stressed, based on an integrated lecture and laboratory. Intended to provide an over-

view for students in technology programs.PREREQUISITE: ALBG-093/097 or MATH-117, and DWRT-099.

PHYS-125 — PHYSICAL SCIENCE 4 credits
This is a course for non-science majors, drawing from topics in physics, chemistry, astronomy, and earth science. It uses a qualitative/descriptive approach to natural phenomena utilizing only basic math skills. This course is primarily intended to fulfill a laboratory science requirement for General Studies students, and although not recommended, may in some cases be used as a transferable science course by Liberal Arts Transfer students. Three-hour laboratory. PREREQUISITES: ALGB-083, ALGB-087, and placement in DRDG-092.

PHYS-130 — COLLEGE PHYSICS 1 4 credits
A non-calculus, college level physics course for liberal arts transfer students or students of the life sciences. Topics include motion, mass, force, conservation laws, momentum, gravitation, work, energy, and heat. There is a three-hour laboratory per week. PREREQUISITE: ALGB-093 (Algebra 2) or ALGB-097.

PHYS-132 — UNIVERSITY PHYSICS 1 4 credits
This course, intended for engineering and science majors, uses calculus extensively. It is the first of a sequence of three rigorous courses in physics. It covers classical mechanics, including statics, the laws of motion, energy, momentum, conservation laws, oscillators, and waves. Includes a three-hour laboratory and one-hour recitation each week. PREREQUISITE: MATH-155; COREQUISITE: MATH-255. Required of ENGR 01, ENGR 02; open to all students.

PHYS-144 — SURVEY OF ASTRONOMY 4 credits
This course is a survey of the science of astronomy designed to satisfy laboratory science transfer credit requirements. Topics covered include how we learn about the universe through an understanding of atomic and subatomic structure, electromagnetic radiation and gravity, and what we currently know of the universe. Cosmological topics such as the Big Bang, dark matter, and the accelerating expansion of the universe and the implications on its ultimate fate will be discussed. Also covered will be star formation, dynamics, evolution, and the structure of galaxies. Additional topics will include the formation and structure of the earth, the planets, the sun and the remainder of the solar system (moons, comets and asteroids). Recent discoveries such as the results of the latest interplanetary probes and the search for extrasolar planets will be discussed, as will astronomical issues impacting our society such as the potential threat of collisions between the earth and comets and asteroids, and the potential existence of extraterrestrial life. Some outdoor observations may be conducted. PREREQUISITES: ALGB-093, ENGL-100; CO-REQUISITES: MATH-132, PHYS-144L.

PHYS-230 — COLLEGE PHYSICS 2 4 credits
A continuation of College Physics 1, this is a non-calculus, college-level physics course for liberal arts transfer students and students in pre-med or life sciences. Topics include electrostatics, basic electronics, circuit analysis, alternating current, and optics. Atomic physics, nuclear physics, and radioactivity are introduced. Includes a three-hour laboratory. PREREQUISITE: ALGB-093 or ALGB-097; RECOMMENDED: PHYS-130.

PHYS-232 — UNIVERSITY PHYSICS 2 4 credits
This course is a continuation of PHYS-132. Topics include: electrostatics, electrical circuits, magnetism, interaction of magnetic fields and currents, and magnetic induction. Maxwell's laws will be introduced. This course demands a command of calculus, vector algebra, and vector analysis. This course includes a three-hour laboratory and one hour of recitation each week. PREREQUISITE: PHYS-132, MATH-255; COREQUISITE: MATH-355. Required of ENGR 01 and ENGR 02; open to all students.

PHYS-256 — OPTICS AND IMAGE RECORDING 4 credits
This course explores capturing images with the action of light. It is a transferable laboratory science course for non-science majors, which provides students with a theoretical foundation and laboratory experience with the properties of light and the techniques of image recording. Topics include the theories and processes involved in recording images on photosensitive surfaces, followed by examining the materials, and measuring the image quality. Among the sub-topics covered are light, color, lenses, photographic history, densitometry, and digital imaging. Includes a three-hour lab. Open to all students. PREREQUISITES: ALGB-083, ALGB-087, and placement at ENGL-100.

PHYS-300 — RADIOLOGIC PHYSICS 1 4 credits
This is a basic atomic physics course emphasizing the medical application of photon ionizing radiation. Topics covered are basic mechanics, basic electrostatics, and fundamentals of electronics. Special topics include: the nature of the photon, ionizing radiation, with emphasis on attenuation processes. The photoelectric effect, Compton effect, pair production, secondary radiation resulting from such, and x-ray spectra are covered in detail. Use of a scientific calculator is required. Three-hour laboratory. PREREQUISITE: Placement in college-level English; ALGB-093 (Algebra 2) or ALGB-097. Required of departments DMIR, DMIN; open to all students.

PHYS-332 — UNIVERSITY PHYSICS 3 4 credits
This is a continuation of PHYS-232. Topics include: Maxwell's equations, electromagnetic waves, oscillators, physical and geometrical optics, concepts of special relativity, Bohr model of the atom, introduction to the Schroedinger equation, wave functions and probability amplitudes. Includes a three-hour laboratory and one-hour recitation each week. PREREQUISITE: PHYS-232 and MATH-355 (Calculus 3).

PHYS-400 — NUCLEAR PHYSICS 4 credits
This course, a continuation of PHYS-300, is a basic nuclear physics course emphasizing the medical applications of radiation. The nuclear properties of the atom are covered, describing energy levels of stable and unstable nuclei, which then are related to radioactive decay. Production of photons and particles from reactors, cyclotrons, linacs, and x-ray machines is covered. Radiation detection instrumentation and radiation dosimetry compliant with the NRC are covered. Topics studied will include those required by medical accrediting agencies (RBE, LET, HVL, and NRC regulations.) Use of a scientific calculator is required and will include problems relating to the natural logarithm. Three-hour laboratory. This is a transferable science course for non-science majors. Required of DMIN; open to all students. PREREQUISITE: Placement at DWRT-099; ALGB-093/ALGB-087; RECOMMENDED: successful completion of PHYS-300.

Political Science

(*See* Social Sciences)

Psychology

(*See* Social Sciences)

Radiography

(*See* Diagnostic Medical Imaging)

Rehabilitation Therapies

OCCUPATIONAL THERAPY ASSISTANT

OCCP-100 — OCCUPATIONAL THERAPY ASSISTANT 1 5 credits
Students will be introduced to the field of occupational therapy and how it relates to other health services. They will learn about expectations for professional behavior, different frames of reference which inform practice, and the structure and foundation of the national organizaiton. During laboratory sessions, students will study cognitive, sensory, and motor skills to analyze crafts, self-care skills, and recreational activities. COREQUISITES: OCCP-100L, PSYC-100, ENGL-100, BIOL-132.

OCCP-200 — OCCUPATIONAL THERAPY ASSISTANT 2 5 credits
Emphasis in this course is on the development, restoration, and compensation of occupational performance. The student will acquire the knowledge and practical skills necessary to participate in the screening, evaluation, and treatment process for patients with physical dysfunction. The student will be educated in the principles of remedial, habilitative and rehabilitative practice, and will have the opportunity to observe these skills in area facilities and the campus rehab clinic. PREREQUISITE: OCCP-100; CONCURRENT: OCCP-200L, BIOL-232, OCCP-201, and OCCP-202.

OCCP-201 — PHYSICAL PATHOLOGY 3 credits
Emphasis in this course is on normal development and physical disabilities caused by neurological, orthopedic impairment or insult, cardiovascular problems, and the degenerative process. The principles of medical practice and, if applicable, educational intervention used with these specific health problems will be identified.
PREREQUISITE: OCCP-100; CO-REQUISITE: OCCP-200, BIOL-232, PSYC-325.

OCCP-202 — MOVEMENT AND FUNCTION 2 credits
In this course students will study the principles of human movement or kinesiology. Their understanding of the material will provide tools to solve clinical problems such as modifying equipment, improving safety in the home and at work, and developing activity programs. PREREQUISITES: OCCP-100, BIOL-132, ENGL-100, PSYC-100; COREQUISITES: OCCP-202L, OCCP-200, OCCP-201, BIOL-232.

OCCP-300 — OCCUPATIONAL THERAPY ASSISTANT 3 5 credits
Emphasis in this course is on the psychosocial aspects of occupational performance and the role of the COTA in the therapeutic process. The student will acquire the knowl-

edge and practical skills necessary to participate in occupational therapy treatment of patients with psychosocial dysfunction. The student will be educated in the principles of mental health and will have opportunities to observe these skills in area facilities. In the lab, the students will apply various frames of reference that inform practice. PREREQUISITES: OCCP-200, OCCP-201, OCCP-202, PSYC- 325, SOCL-100, ENGL-200; CONCURRENT: OCCP-300L, OCCP-301, OCCP-302, HCAR-300, MAST-211.

OCCP-301 — PSYCHOSOCIAL PATHOLOGY 3 credits
The classification system for psychiatric diagnoses helps professionals in occupational therapy understand their patients' problems, communicate with one another, and design clinical interventions. This course will explore how medical practitioners view individuals with mental health problems and the implications of psychiatric symptoms for our clients' functional abilities. PREREQUISITES: OCCP-200, OCCP-201, OCCP-202; CONCURRENT: OCCP-300, OCCP-302, HCAR-300, MAST-211.

OCCP-302 — OCCUPATIONAL THERAPY MEDIA 3 credits
This course builds on the information presented in the physical dysfunction classes during the prior semester. In order for some patients to improve or maintain their functional capabilities in the home, workplace, and community, they may need special equipment or electronic technology. Students will learn about a variety of assistive devices and modalities such as wheelchairs, adpative control switches, and computer systems.PREREQUISITES: OCCP-200, OCCP-201, OCCP-202, PSYC-325, ENGL-200; CONCURRENT: OCCP-300, OCCP-301: OCCP-302L, HCAR-300.

OCCP-400 — OCCUPATIONAL THERAPY ASSISTANT SEMINAR 2 credits
This course is designed to foster critical thinking, application of theory, and professional roles and behaviors. Sharing practical experiences will be encouraged. Students will be assisted in preparation for employment and the National Certification Examination for Occupational Therapy Assistants. PREREQUISITES: OCCP-300, OCCP-301, OCCP-302; CONCURRENT: OCCP-411 or OCCP-412.

OCCP-411 — OCCUPATIONAL THERAPY ASSISTANT PRACTICUM 1* 5 credits
Eight weeks of full-time fieldwork experience conducted under the supervision of a registered occupational therapist in the area of psychosocial or physical dysfunction. The purpose of this experience is to further application of academic and technical skills. PREREQUISITES: OCCP-300, OCCP-301, OCCP-302; CONCURRENT: OCCP-400.

OCCP-412 — OCCUPATIONAL THERAPY ASSISTANT PRACTICUM 2* 5 credits
Eight weeks of ful-time fieldwork experience conducted under the supervision of a registered ocupational therapist in the area of psychosocial or physical dysfunction. The purpose of this experience is to further application of academic and technical skills. PREREQUISITES: OCCP-300, OCCP-301, OCCP-302; CONCURRENT: OCCP-400.

*It should be noted that the practicum hours of OCCP-411 are prerequisites to the practicum hours of OCCP-412.

PHYSICAL THERAPIST ASSISTANT

PTAS-100 — PHYSICAL THERAPIST ASSISTANT 1 4 credits
This course provides an overview of physical therapy and the role of the assistant. Professional ethics and responsibilities are discussed. Emphasis is on the performance

of basic skills used by the Physical Therapist Assistant. These include transfers, patient mobility, gait training, range of motion, vital signs, use of the tilt table, use of mechanical lift, massage, and postural drainage. Clinical observation will be included for initial patient contact. CO-REQUISITES: PTAS-100L, BIOL-132

PTAS-101 — INTRODUCTION TO PHYSICAL THERAPY *(7 weeks)* 1 credit
This course presents an introduction to and broad background on the profession of physical therapy. It is designed for the student beginning the PTA program or considering application to it. PREREQUISITE: For PTA students: acceptance into the program. For other students: completion of DRDG-092 or placement at DRDG-105 level. Two hours lecture for 7 weeks.

PTAS-200 — KINESIOLOGY 4 credits
This course is designed to develop an understanding of the dynamics of human motion through the study of muscles and joints. Extensive review of anatomy and physiology is required for this course. PREREQUISITES: BIOL-132, PTAS-100 CO-REQUISITES: PTAS-201, BIOL-232, PTAS-200L, HCAR-350, PTAS-202.

PTAS-201 — PHYSICAL THERAPIST ASSISTANT 2 4 credits
This course provides lecture and laboratory work in the study of the various modalities used in physical therapy, the physiological effects of the modalities, and the indications and contraindications for usage of the various modalities. Principles and practice of mechanical traction of cervical and lumbar spines, as well as wound care will be presented. PREREQUISITES: PTAS-100, BIOL-132; CO-REQUISITES: PTAS-200, PTAS-202, BIOL-232, PTAS-201L, HCAR-350.

PTAS-202—FUNDAMENTALS OF MEASUREMENT SKILLS 2 credits
This course develops competency in the basic data collection skills of goniometry and manual muscle testing. Laboratory experiences reinforce the application of these skills within the context of physical therapy practice. Lecture one hour. A lab is required with this course. PREREQUISITES: PTAS-100, BIOL-132; CO-REQUISITE: PTAS-200, PTAS-201, BIOL-232, PTAS-202L.

PTAS-306 — NEUROLOGICAL TREATMENT APPROACHES/ INTEGRATED PRACTICE 3 credits
This course will provide the student with a framework of current and historical approaches to treatment of the neurologically-impaired patient, from pediatric to geriatric. PREREQUISITES: PTAS-200, PTAS-201, PTAS-200, HCAR-350; CO-REQUISITES: PTAS-306L, PTAS-307, PTAS-308, HCAR-300, MAST-211.

PTAS-307 — INTRODUCTORY SUPERVISED CLINICAL EXPERIENCE 1 credit
This course will provide the senior student with 50 hours of patient contact under the close supervision of a physical therapist or physical therapist assistant, in various clinical settings. The emphasis will be on development of professional behaviors with patients and other health care workers, in addition to the practice of those clinical skills acquired thus far in the curriculum. PREREQUISITES: PTAS-200, PTAS-201, PTAS-202, HCAR-350; CO-REQUISITES: PTAS-306, PTAS-308, HCAR-300, MAST-211.

PTAS-308 — ORTHOPEDIC TREATMENT PROCEDURE 4 credits
This course will provide the student with mechanical and physiological concepts of exercise programs, with emphasis on the problems related to the patient's skeletal and muscular involvement. Laboratory experiences will develop the student's skill in the application of various treatment techniques. A clinical field trip experience will augment the laboratory sessions. PREREQUISITES: PTAS-200, PTAS-201, PTAS-202, HCAR-350; CO-REQUISITES: PTAS-306, PTAS-307, PTAS-308 L, HCAR-300, MAST-211.

PTAS-402 — PHYSICAL THERAPIST ASSISTANT SEMINAR 1 credit
The purpose of these seminars is to correlate the academic and technical courses with the practical clinical work. They are alternately scheduled with the affiliation assignments so that students may return to the classroom for sharing and discussion. PREREQUISITES: All other courses must be completed by the end of the third semester; CO-REQUISITES: PTAS-403, PTAS-404.

PTAS-403 — SUPERVISED CLINICAL EXPERIENCE *(7 weeks)* 6 credits
Supervised practice in selected clinical settings. PREREQUISITES: All other courses must be completed by the end of the third semester; CO-REQUISITE: PTAS-402.

PTAS-404 — SUPERVISED CLINICAL EXPERIENCE *(7 weeks)* 6 credits
Supervised practice in selected clinical settings. PREREQUISITE: PTAS-403; CO-REQUISITE: PTAS-402.

Respiratory Care

RSPC-104 — INTRODUCTION TO RESPIRATORY CARE 3 credits
This introductory course includes a study of cardiopulmonary anatomy/physiology, arterial blood gas interpretation, introduction to cardiopulmonary disease, medical terminology, communication skills, and ethics. The course is designed to provide the student with fundamental knowledge and theory which will enable the student to understand the more complex theories and practice of respiratory care in subsequent courses.

RSPC-105 — RESPIRATORY CARE 1 4 credits
This course is designed to be a study of respiratory care equipment and the physical principles involved in its use. Among areas to be discussed are: oxygen transport, gas physics, medical gas therapy, gas analyzing equipment, CPR, airway management, and bedside measurement and monitoring devices. The didactic portion consists primarily of lectures, and the clinical hours provide for application of principles learned in the classroom. CO-REQUISITE: RSPC-105L

RSPC-205 — RESPIRATORY CARE 2 4 credits
This is the second part of a two-semester course which integrates physical principles with their application to clinical equipment. Application of humidity and aerosol therapy, infection control, hyperinflation therapy, postural drainage therapy, suctioning airways, and basics of mechanical ventilation will be discussed. The didactic portion consists primarily of lectures, and the clinical hours provide for application of principles learned in the classroom. PREREQUISITES: RSPC-105, BIOL-132, BIOL-140; CO-REQUISITE: RSPC-205L

RSPC-207 — RESPIRATORY CARE 3 3 credits
This course is a study in clinical assessment in respiratory care. Topics to be covered are fundamentals of respiratory assessment, interpretation of blood gases, clinical application of the chest radiograph, clinical laboratory studies, advanced assessment techniques, assessment of sleep and breathing, and special procedures. Equipment and current trends in these areas will be examined. The didactic portion consists primarily of lectures, and the clinical hours provide application of principles learned in the classroom. PREREQUISITES: RSPC-105, BIOL-132, BIOL-140.

RSPC-215 — RESPIRATORY CARE 4 *(8 weeks)* 2 credits
This course is an extensive study of general applications, contraindications, and hazards of pharmacological agents used in the treatment of cardiopulmonary diseases. Calculation of dosages and mechanical means of application of medication will be covered. PREREQUISITES: BIOL-140, RSPC-207, BIOL-232; CO-REQUISITE: RSPC-216.

RSPC-216 — RESPIRATORY CARE PRACTICUM 1 *(8 weeks)* 4 credits
The clinical, bedside, and laboratory application of respiratory care is presented, utilizing the facilities of affiliated clinical sites and College laboratory under supervision of hospital respiratory care practitioners, physicians, and College faculty. Clinical affiliation is designed to expose students to an environment in which they can practice respiratory care. PREREQUISITES: BIOL-140, RSPC-205, RSPC-207, BIOL-232; CO-REQUISITE: RSPC-215

RSPC-303 — INTENSIVE RESPIRATORY CARE 3 credits
An in-depth study of the principles of mechanical ventilation while in the adult, pediatric, and neonatal intensive care. Theory/application of mechanical ventilation will be discussed in detail. PREREQUISITE: BIOL-121, RSPC-215, RSPC-216.

RSPC-305 — PULMONARY FUNCTION TESTING 3 credits
This course will examine in detail equipment, diagnostic testing, interpretation, and the patterns of various respiratory diseases. Students learn how to use equipment in various pulmonary function labs. PREREQUISITES: BIOL-121, RSPC-215, RSPC-216.

RSPC-306 — RESP. CARE APPLICATIONS/CLINICAL SCIENCES 1 2 credits
This course is offered over two semesters, and encompasses physiology of the cardiovascular and pulmonary systems, and physiology designed to prepare the student for clinical judgment in respiratory care. Topics related to respiratory function, acid-base balance, and ventilation and perfusion relationship are included. PREREQUISITES: BIOL-121, RSPC-215, RSPC-216.

RSPC-310 — RESPIRATORY CARE 5 3 credits
This course will examine in detail the principles and theories of pulmonary rehabilitation, home health care, asthma and disease management. PREREQUISITES: RSPC-215, BIOL-121, RSPC-216.

RSPC-311 — RESPIRATORY CARE PRACTICUM 2 4 credits
The clinical, bedside, and laboratory application of respiratory care is presented, utilizing the facilities of affiliated clinical sites and College laboratory under supervision of hospital respiratory care practitioners, physicians, and College faculty. Clinical affiliation is designed to expose students to an environment in which they can practice respiratory care. PREREQUISITES: RSPC-215, RSPC-216, BIOL-121.

RSPC-408 — RESPIRATORY CARE 6 3 credits
This course is a study in hemodynamic monitoring, electrocardiography, ACLS, and preparation for the NBRC advanced practitioner exam. Students will learn how to take the RRT simulation exam. The final exam will be self-assessment exam (NBRC Registry exams), written and simulation. PREREQUISITES: BIOL-232, RSPC-310.

RSPC-409 — NEONATAL/PEDIATRIC CARE 3 credits
This course offers the foundation of neonatal and pediatric respiratory care, from anatomic and physiologic development of the cardiopulmonary system to various disease states. The course will focus on etiology, pathophysiology, diagnosis, treatment, and prevention for each disease state. Evaluation of the neonatal and pediatric patient will include history, physical and clinical assessments as well as radiologic evaluations. PREREQUISITES: BIOL-232, RSPC-303, RSPC-305.

RSPC-410 — RESPIRATORY CARE PRACTICUM 3 5 credits
The clinical, bedside, and laboratory application of respiratory care is presented, utilizing the facilities of affiliated clinical sites and College laboratory under supervision of hospital respiratory care practitioners, physicians, and College faculty. Clinical affiliation is designed to expose students to an environment in which they can practice respiratory care. PREREQUISITES: BIOL-140, BIOL-232, RSPC-311.

RSPC-411 — RESPIRATORY CARE APPLICATION AND CLINICAL SCIENCES 2 1 credit
This is the second part of a two-semester course encompassing pulmonary pathology. Special emphasis is placed on the etiology, pathophysiology, and treatment of pulmonary diseases. PREREQUISITES: BIOL-140, BIOL-232, RSPC-306.

Social Sciences

ECONOMICS

ECON-100 — PRINCIPLES OF ECONOMICS 1 3 credits
This course is primarily concerned with macroeconomics and aims at developing an understanding of American economic institutions and the economic problems of inflation, unemployment and economic growth. Emphasis is given to the principal tool of economists, the market model of demand and supply. The effects of both fiscal and monetary policies on the major problems of the economy are thoroughly explored. PREREQUISITE: None.

ECON-200 — PRINCIPLES OF ECONOMICS 2 3 credits
This course is sequential to Principles of Economics 1 and is primarily concerned with Microeconomics. Microeconomics deals with the subsystems of the economy such as the economics of the firm and the industry. The major emphasis is on a thorough analysis of supply and demand and of the four market structures. The theories and concepts are then applied to American major industries. PREREQUISITE: ECON-100.

ECON-300 — CURRENT ECONOMIC PROBLEMS 3 credits
A course designed to acquaint the student with several of the more important problems of our economy such as economic growth, unemployment, and the several ideologically-based prescriptions to these problems. PREREQUISITE: ECON-100.

ECON-320 — DEVELOPMENT ECONOMICS SEMINAR 3 credits
This seminar will survey various economic growth models with focus on the theories and issues of development economics as they apply to the real world economic situations in the Third World. The organizational structures and strategies designed to cope with issues and problems of economic development in the Third World will be analyzed. There will be an in-depth study done on the basis of selected countries in the Third World. PREREQUISITE: ECON-100. Honors component available.

HISTORY

HIST-100 — SURVEY OF EARLY WESTERN CIVILIZATION 3 credits
Origin and development of western civilization from the Stone Age through the classical civilization of the ancient world. The contributions of each major historical group through the emergence of modern Europe will be explored with emphasis on the social, economic, and political trends of each period.

HIST-110 — SURVEY OF EARLY U.S. HISTORY AND GOVERNMENT 3 credits
History of the United States from the Colonial period to the end of the Civil War and Reconstruction. A topical approach is followed within a chronological framework centering on the colonial origins of American society, its separation from England, the subsequent process of nation building, framing of the Constitution, formation and structure of the United States government, and the development of the Civil War during the Ante-Bellum period.

HIST-200 — SURVEY OF MODERN WESTERN CIVILIZATION 3 credits
Modern Western Civilization from the end of the Middle Ages to the present. Begins with 14th Century Europe and discusses the beginnings of modern science; the Enlightenment and the political revolutions in England, America, and France; the industrial and intellectual revolutions of the Nineteenth Century; the World Wars of the Twentieth Century and developments which follow in the post-war period. PREREQUISITE: None. Honors component available.

HIST-210 — SURVEY OF MODERN U.S. HISTORY 3 credits
History of the United States from the end of the Reconstruction period to the present. Consideration will be given to the impact of the Industrial Revolution on Late Nineteenth Century America and the influence of war and reform on the nation during the Twentieth Century. A social cultural and new political approach will be utilized. PREREQUISITE: None.

HIST-300 — HISTORY OF CIVILIZATION TO 1650 3 credits
This course follows the development of China, Japan, India, Africa, Eastern Europe, and South America from the Stone Age to 1650. It will examine scientific, economic, social, and cultural trends, with particular emphasis on the influence of religion and philosophy that is not based on the Judeao-Christian ethic.

HIST-322 — INTRODUCTION TO AFRICAN-AMERICAN HISTORY: COLONIAL TO 1865 3 credits
The purpose of the course is to introduce the student to the history of the African-American in the United States. Beginning with an exploration of the African heritage, the course will explore the social, economic, and political role of African-Americans from the colonial period through 1865. The course will also examine the development of black culture in the United States, the diversity of this culture, and its contribution to American culture in general. PREREQUISITE: ENGL-100

HIST-323 — INTRODUCTION TO AFRICAN-AMERICAN HISTORY: 1865 - PRESENT 3 credits
The purpose of the course is to introduce the student to the history of the Afro-American in the United States. Beginning with an exploration of the African heritage, the course will explore the social, economic, and political role of African-Americans from 1865 through the Civil Rights movement of the 1960s. The course will also examine the development of black culture in the United States, the diversity of this culture, and its contribution to American culture in general. PREREQUISITE: ENGL-100

HIST-400 — HISTORY OF CIVILIZATION SINCE 1650 3 credits
This course follows the development of China, Japan, India, Africa, Eastern Europe, and South America from 1650 to the present. It examines scientific, economic, social, and cultural trends with particular emphasis on the influence of religion and philosophy that is not based on the Judeao-Christian ethic.

HIST-425 — WOMEN IN HISTORY 3 credits
This course will trace the history of women in America. It will focus on their economic, political, and social roles, as America moved from being an agrarian society to an industrial one. The course will also examine the historical role of women after World War I, and the influence of the civil rights movement on the late 20th century women's movement. Primary sources will be used in this course. PREREQUISITE: None.

HIST-900 — DIRECTED STUDY IN HISTORY variable credit
Semester hours credit will vary from one to three, depending upon the written, agreed-upon, approved, student-professor contract.

POLITICAL SCIENCE

PSCI-100 — AMERICAN GOVERNMENT AND POLITICS 3 credits
An analysis of the way in which politics and political institutions work in American society. The major problems of American democracy are explored, with their political, social, and economic implications. Also explored are constitutional rights and freedoms, the federal power structure, and changing governmental institutions. PREREQUISITE: None.

PSCI-250 — INTERNATIONAL RELATIONS 3 credits
This course is designed to aid the student in reaching a better understanding of world politics, which determines whether we as individuals and our civilization will prosper, and the search for international order. The nation-state system, nation's interests, conflict or cooperation, and the search for international order will be discussed. An emphasis is placed on highly volatile current events.

PSCI-300 — POLITICAL THEORY 1: FROM PLATO TO HOBBES 3 credits
This course is a survey and comparative analysis of the political writings of various thinkers from classical antiquity to the 1600s. The course will also examine key concepts of normative political theory, such as power, ideology, and the state, and their relationship to the perennial problems of the social order.

PSCI-330 — POLITICAL THEORY 2: 1600 TO THE PRESENT 3 credits
This course is a survey and comparative analysis of the political writings of various thinkers from 1600 to the present. The course will examine such political constructs as nationalism, anarchism, democratic socialism and Marxism, conservatism, and fascism.

PSCI-900 — DIRECTED STUDY IN POLITICAL SCIENCE Variable credits
Semester hour credit will vary from one to three, depending upon the written, agreed-upon approved, student-professor contracts.

PSYCHOLOGY

PSYC-100 — GENERAL PSYCHOLOGY 3 credits
This introductory course identifies those scientific methods used to study human behavior. Discussion centers around the contribution of heredity, environment, learning, perception, motivation and emotion in shaping our individual personalities. Honors component available.

PSYC-109 — HUMAN RELATIONS 3 credits
This is a course designed to build a strong self image. Each student has an opportunity to understand that he/she is a functioning human being in the twentieth century and that this is not a task to be taken lightly. He/she will realize that we are all similar in many ways and that we are also different. This course will help the student establish a philosophy of life that will be very helpful in his/her communications and awareness of the future.

PSYC-305 — CHILD PSYCHOLOGY 3 credits
This advanced course examines the major influences on a child's physical, cognitive, and social development from conception through early childhood. Information is presented in chronological order to give an integrated view of the child at each major phase of development. An examination of the basic theories and contemporary research suggest some answers for more effective parenting. PREREQUISITE: PSYC-100.

PSYC-325 — LIFESPAN HUMAN GROWTH AND DEVELOPMENT 3 credits
This course will emphasize the cognitive, biological, psychosocial, sexual, cultural, and moral development of the individual from conception through old age. The theories of Freud, Erikson, Piaget, Kohlberg, Kubler-Ross, and other prominent psychologists will be applied to specific problems in the developmental process. PREREQUISITE: PSYC-100.

PSYC-335 — THEORIES OF PERSONALITY 3 credits
This course is an introduction to psychological theory and research on the concept of personality. It examines the prominent paradigms in personality theory: psychodynamic, behavioral, cognitive, humanistic, and trait theory. Particular emphasis is placed on the determinants and development of personality and current thought regarding the interplay of biological and environmental influences.

PSYC-350 — ADOLESCENT PSYCHOLOGY 3 credits
This advanced course examines the major influences on a person's physical, cognitive and social development from middle childhood through adolescence. An examination of the basic theories and contemporary research is presented for each major phase in order to give an integrated view of development in humans during this time of their lives. PREREQUISITE: PSYC-100.

PSYC-400 — PRINCIPLES OF NORMAL/ABNORMAL BEHAVIOR 3 credits
A general introduction into the origin, development, types of mental illness, and the methods of coping with psychological dysfunction. Inquiry will also be made into the theoretical and applied approaches of several of the major schools of thought with regard to helping services. PREREQUISITE: PSYC-100.

PSYC-900 — DIRECTED STUDY IN PSYCHOLOGY Variable credits
Semester hour credit will vary from one to three, depending upon the written, agreed-upon, approved, student-professor contract.

SOCIOLOGY/ANTHROPOLOGY

SOCL-100 — INTRODUCTION TO SOCIOLOGY 3 credits

An introductory course designed to acquaint the student with a working knowledge of the concepts used by sociologists and with the well-established generalizations in the field. Topics to be studied include socialization, culture, population, group processes social stratification, ethnic/racial stratification, gender stratification, and social change. PREREQUISITE: ENGL-100 encouraged.

SOCL-110 — INTRODUCTION TO ANTHROPOLOGY 3 credits

A general introduction to social and cultural anthropology which will explore among the diverse cultures of the world some of the possible variations in technology, economics, social and political organization, art, religion and ideology. Each year the world grows smaller in each area of communication, transportation, and general economic interdependence. However, an understanding of cultural differences among the people of the world is often lacking. Cultural anthropology provides a systematic description and comparison of the ways of life of groups of people throughout the world. An appreciation of the solutions to human problems developed by other cultures allows not only greater perception of our own way of life, but also of the values and goals of others. The fundamental objective of this course is to provide insight into various ways that people respond to basic human needs.

SOCL-200 — SOCIAL PROBLEMS 3 credits

This course applies the principles and concepts of sociology to an understanding of contemporary social problems such as poverty, minority status, crime, alcohol, drug addiction, etc. Emphasis will be placed on the connection between personal experience and the larger social, political, and economic institutions of society. PREREQUISITE: SOCL-100 or SOCL-110.

SOCL-250 — SOCIOLOGY OF THE FAMILY 3 credits

This course will focus on the historical development of the family. Its focal point will be the North American family. Cross-cultural comparison will be used, especially in the study of marriage and kinship practices. Strong emphasis will also be placed on family change and social problems such as domestic violence. It will also include such topics as single parenting, changing gender roles, and alternatives to the traditional family. We will apply this knowledge to everyday life experiences. PREREQUISITES: SOCL-100 or SOCL-110. **Not offered every year.**

SOCL-301 — RACE AND ETHNIC RELATIONS 3 credits

This course will explore race and ethnicity from a sociological perspective. It will incorporate a cultural and historical analysis of the ethnic groups nationally in the greater Springfield area. Topics will include prejudice, discrimination, stereotypes, assimilation, cultural pluralism, imperialism, and theoretical perspectives of race and ethnic relations.

SOCL-900 — DIRECTED STUDY IN SOCIOLOGY/ANTHROPOLOGY

Variable credits

Semester hour credit will vary from one to three, depending upon the approved student-professor contract.

Sonography

(*See* Diagnostic Medical imaging)

Spanish

(*See* Foreign Languages)

Student Development

FRES-099— FRESHMAN SEMINAR
This is a developmental course. Credit for this course will not be counted toward fulfilling graduation requirements at STCC.

FRES-126 — STUDY SKILLS SEMINAR — MODULE 1 1 credit
This module covers self-assessment, study habits and skills, time management and planning, scholastic motivation, learning styles, note-taking, thinking skills, and institutional resources at STCC. Restricted to Verizon Next Step program students.

FRES-160 — COLLEGE SUCCESS SEMINAR 3 credits
In this seminar the student explores the purposes of higher education and his/her potential role as a participant in college and other learning environments. The student studies the concepts, theories, and techniques of time management, note taking, comprehension of academic materials, test taking, and written and oral presentations. Individual and group learning experiences increase the student's knowledge of campus and community resources, ability to engage in critical thinking, and proficiency in communication. Emphasizing academic and personal development, the seminar encourages the student to develop individual responsibility for lifelong learning. PREREQUISITE: None

Surgical Technology

SURG-104 — INTRODUCTION TO SURGICAL TECHNOLOGY 6 credits
An introduction to surgical technology focusing on selected aspects in the development of surgical technology as a technical profession, concepts of patient care, legal and ethical responsibilities, and team members in surgery. Knowledge and skill common to patient care and surgical procedures: asepsis, the environment, sterilization and processing of goods, universal precautions, scrubbing, gowning and gloving, classification and recognition of instruments and supplies are presented in lecture and in the STCC operating room. Surgical terminology is included. Lecture four hours, lab

four hours on campus in the STCC operating room and at hospitals. PREREQUISITE: admission to the Surgical Technology program; all health, technical standards, and CORI completed. CO-REQUISITE: SURG-104L, BIOL-132.

SURG-204 — PRINCIPLES AND PRACTICES OF SURGICAL TECHNOLOGY 4 credits

Content common to surgical procedures is presented in this course, which builds on SURG-104 and focuses on such topics as occupational safety, methods of hemostasis, care and handling of specimens, incisions, wound closure, drains, dressing, needles, suture materials, endoscopic surgery, anesthesia, and complications of surgery. Selected surgical procedures are included as prototypes to explain content. Safe handling of instruments, and additional instruments and supplies are included. PREREQUISITES: SURG-103, BIOL-132: CO-REQUISITE: SURG-205.

SURG-207 — PRACTICES COMMON TO SURGICAL PROCEDURES 2 credits

This laboratory course takes place in the operating room on the STCC campus. Hands-on experiences in planning for, setting up, carrying out, and breaking down a case, and preparing and handling supplies and instruments common to most surgical procedures are the focus of this course. The class meets four hours a week for 15 weeks. The content from SURG-104 and SURG-204 is integrated into this experience. PREREQUISITES: SURG-104, BIOL-132; CO-REQUISITES: SURG-204, SURG-208.

SURG-208 — CLINICAL PRACTICE IN SURGERY 2 credits

This clinical rotation in a hospital provides the first opportunity for the student to "scrub" on surgical operations and work with specialized supplies and equipment. Knowledge and skills from SURG-104 and SURG-204 are applied. Students will be participating in setting up, carrying out, and breaking down a surgical case, and will experience the environment of the work and team members. Planned clinical conference will provide time for exposure to biotechnology and specialized instruments and discussion of the experience. Offered 8 hours a week for 15 weeks. Saturdays may be used. Clinical starts at 6:45 a.m. PREREQUISITE: SURG-104; CO-REQUISITES: SURG-204, SURG-207, BIOL-232.

SURG-306 — HEALTH PROBLEMS AND SURGICAL SPECIALTIES 1 4 credits

Regional anatomy, common health problems, patient care considerations, anesthesia, surgical procedures, specialty instruments, supplies and interoperatve complications form the organization of this course. Selected surgical specialties are presented, for example: surgery of the abdomen, urogenital, operative obstetrics/gynecological, cancer, and others. Surgical terminology, pharmacology, and safe handling of drugs on the operative field are included. PREREQUISITES: SURG-206, BIOL-232, BIOL-121. CO-REQUISITE: SURG-307.

SURG-307 — CLINICAL PRACTICE IN SURGERY 2 5 credits

Clinical experience in surgery with exposure to the overall operation, policies, and procedures of practice. The student is immersed in the work for the first scrub and assisting circulator in an operating room. Application of previous courses, STCC operating room laboratory experience, and rotations in surgical specialties will provide an opportunity for skill acquisition, safe practice, and the development of professional behaviors. With repeated experiences, students will demonstrate the ability to recall sequence in planning for, setting up, carrying out, and breaking down a surgical procedure, as well as working with specialized tools (biotechnology.) Clinical conferences provide an opportunity for students to discuss their experiences. Lab hours are 20 hours per week for 15 weeks. PREREQUISITES: Completion of semesters 1 and 2 and summer session, all health requirements; CO-REQUISITES: SURG-306, SURG-308, SURG-309.

SURG-308— PHARMACOLOGY AND PATHOLOGY 2 credits
This course will provide students with a foundation in pharmacology and pathology. This will prepare the student to safely and appropriately prepare and manage operating room medications, solutions, and specimens. This lecture class meets two hours per week for 15 weeks. The content from SURG-104 and SURG-204 is integrated into this course. PREREQUISITES: Completion of semesters 1 and 2 and summer session; CO-REQUISITES: SURG-306, SURG-307.

SURG-309 — ROLE OF THE SURGICAL TECHNOLOGIST 1 1 credit
This course will provide students with a knowledge and understanding of the unique oganization behavior in the operating room. Classes will consist of lecture, group duscussion, and role play. This class meets one hour per week for 15 weeks. The experiences from SURG-104, SURG-207, and SURG-306 will be incorporated into this couse. PREREQUISITES: SURG-204, SURG-207, SURG-208, BIOL-121, BIOL-232; CO-REQUISITES: SURG-306,SURG-307, SURG-308.

SURG-403 — ROLE OF THE SURGICAL TECHNOLOGIST 2 2 credits
Leadership aspects of the surgical technologist as a technical professional are the capstone experience of the program. State-of-the-art issues in health care and in clinical practice; emerging into the work world; career opportunities; career seeking and achieving strategies are discussed. Certification, registration, licensure are selected topics also. Students prepare and present a clinical paper. PREREQUISITE: Completion of semesters 1-3. May be taken in last semester only.

SURG-408 — HEALTH PROBLEMS AND SURGICAL SPECIALTIES 2 4 credits
A continuation of SURG-306/307 with additional surgical specialties presented, for example: neurology, pediatrics, trauma, transplant, eye, cardiac surgery, and others. Students will be expected to transfer and build on previous content and experiences. PREREQUISITE: all 100, 200, and 300 courses with the exception of CMPA-103 or general elective. CO-REQUISITE: SURG-409.

SURG-409 — CLINICAL PRACTICE IN SURGERY 3 6 credits
A continuation of SURG-307. With clinical experience in surgical specialties planned to expose the student to the overall policies and procedures of a hospital operating room. This final semester experience builds on previous knowledge and skills for skill acquisition, safe practice, and the development of professional behaviors. During this experience, the students will serve in various roles as first scrub, selected first assistant, and will practice as a technical professional. Clinical conferences will provide opportunity to discuss this experience. Clinical hours 24/week, starting at 6:45 a.m. PREREQUISITES: SURG-306, SURG-307; CO-REQUISITE: SURG-408.

Telecommunications Technology

TCOM-140 — ELECTRICAL CIRCUIT THEORY 5 credits
This course serves as an introduction to the theory of DC and AC electrical circuits. Students learn the fundamental concepts of voltage, current, resistance, and power and energy, and the relationship between them. Methods of circuit analysis using Ohm's law, Kirchoff's laws, and network theorems are studied. Concepts of AC, capacitance and inductance are presented. Impedance, R-L-C circuits, impedance networks, and transformers are introduced. The understanding of circuit theory is

reinforced by performance of laboratory activities and the extensive use of computer software for circuit analysis and simulation. COREQUISITE: MATH-132

TCOM-150 — INTRODUCTION TO TELECOMMUNICATIONS 1 credit
This course is an introduction to the fundamental concepts of telecommunications. The existing tuned voice network is explored and defined with existing limitations. Next, the concept of transmitting data on the existing voice network and limitations are explained. Broadband methods, ADSL, and cable modem are then described and contrasted to data transmission over the tuned voice network. Finally, local area networks and wide area networks are introduced and discussed. One hour lecture. PREREQUISITES: ESET-111, ESET-141, ESET-145.

TCOM-210 — INTRO. TO TELECOMMUNICATION NETWORKS 3 credits
This course is an introduction to the basic concepts of telecommunications. A brief history of the telecommunications industry will be followed by a description of present public and private telecommunications networks. Concepts of analog and digital signals, frequency spectra, bandwidth, modulation and multiplexing techniques will be explored. Next, the hardware of a telecommunications system will be introduced; coverage includes transmission and reception technology, switching systems and transmission media. The laboratory portion of the course will allow students to verify concepts introduced in class. PREREQUISITE: ESET-141, ESET-145, ESET-111; CO-REQUISITE: TCOM-210L.

TCOM-310 — TELECOMMUNICATIONS 1 4 credits
An introduction to the techniques, principles, and terminology of voice telecommunications will be presented. Public and private telecommunication networks will be examined. Telecommunication equipment, switching, and transmission technology will be demonstrated. The frequency spectrum, modulation schemes, and multiplexing techniques will be explored. Lectures, interactive learning, and demonstrations will be employed. Lab exercises will be required. PREREQUISITE: ESET-140 or permission of instructor.

TCOM-315 — PHYSICAL LAYER TELECOMMUNICATIONS SYSTEMS 4 credits
This course is an introduction to data communications. Data communications systems will be examined in detail with coverage of topics such as the seven-layer ISO model, network topologies, transmission principles, the physical layer, DTE/DCE basics, transmission media, coding and modulation schemes, and protocol basics at the data link layer. The laboratory portion of the course will allow students to verify concepts introduced in class. PREREQUISITE: Senior standing or permission of instructor.

TCOM-320 — TELECOMMUNICATIONS 2 4 credits
An introduction to the techniques, principles, and terminology of data communications will be presented. Public and private networks will be examined. Data communication equipment, multiplexing, and transmission technology will be demonstrated. Lectures, interactive learning, and demonstrations will be employed. Lab exercises will be required. PREREQUISITE: TCOM-310 or permission of instructor.

TCOM-330 — TELECOMMUNICATIONS ELECTRONICS 4 credits
This course presents material about the basic theory and operation of analog electronic devices used in the telecommunications industry. Topics covered include diodes, power supplies, BJT and FET transistors, biasing techniques, and operational amplifiers. Applications of the Op-Amps and other linear integrated circuits (ICs) are introduced with coverage of amplifiers, waveform generators, active filters, voltage regulators and signal converters. The laboratory portion of the course gives the student experi-

ence with the construction, simulation, and testing of analog electronics systems. Three hours lecture. PREREQUISITE: ESET-141, ESET-145; CO-REQUISITE: TCOM-330L

TCOM-410 — TELECOMMUNICATIONS 3 4 credits
An introduction to the technology and terminology of local area networks (LANs) will be presented. The topologies, transmission media, network interfaces, and access methods will be examined. Shared resources and interconnecting of LANs will be explored. Lectures, interactive learning, and demonstrations will be employed. Lab exercises will be required. PREREQUISITE: TCOM-320 or permission of instructor.

TCOM-415 — BROADBAND TELECOMMUNICATIONS SYSTEMS 4 credits
This course will introduce the student to emerging technologies in the telecommunications field. Topic coverage will include broadband transport mechanisms such as ATM, BISDN, SMDS, frame relay, SONET and xDSL, emerging broadband systems such as hybrid fiber/coaxial (HFC) networks, wireless networks: cellular, local multipoint distribution servce (LMDS) and satellite systems, and emerging applications technologies such as video conferencing and multimedia technologies. Additional topics will include regulatory issues and telecommunication system management. The laboratory portion of the course will allow the student to gain experience with these emerging technologies. PREREQUISITE: Senior standing or permission of instructor.

TCOM-420 — TELECOMMUNICATIONS 4 4 credits
A survey of current and emerging technologies in telecommunications will be presented. Lectures, interactive learning, demonstrations, and site visits will be employed. Lab exercises will be required. PREREQUISITE: TCOM-410 or permission of instructor.

TCOM-430 — LIGHTWAVE COMMUNICATION 4 credits
This course will introduce the student to photonics and the fundamentals of fiber optic networks. Topic coverage will include laser diodes, photodiodes and phototransistors, driver and detector circuitry, and RF modulators. Additionally, optical communications systems will be examined in detail. Detection techniques, power measurement, wave length division multiplexing (WDM) systems, and design considerations for fiber systems will be discussed. The laboratory portion of the course will allow the student to gain experience with the construction and testing of fiber optic networks. PREREQUISITE: Senior standing or permission of instructor.

Teleproduction & Multimedia Technology

See Digital Media Production

Directories

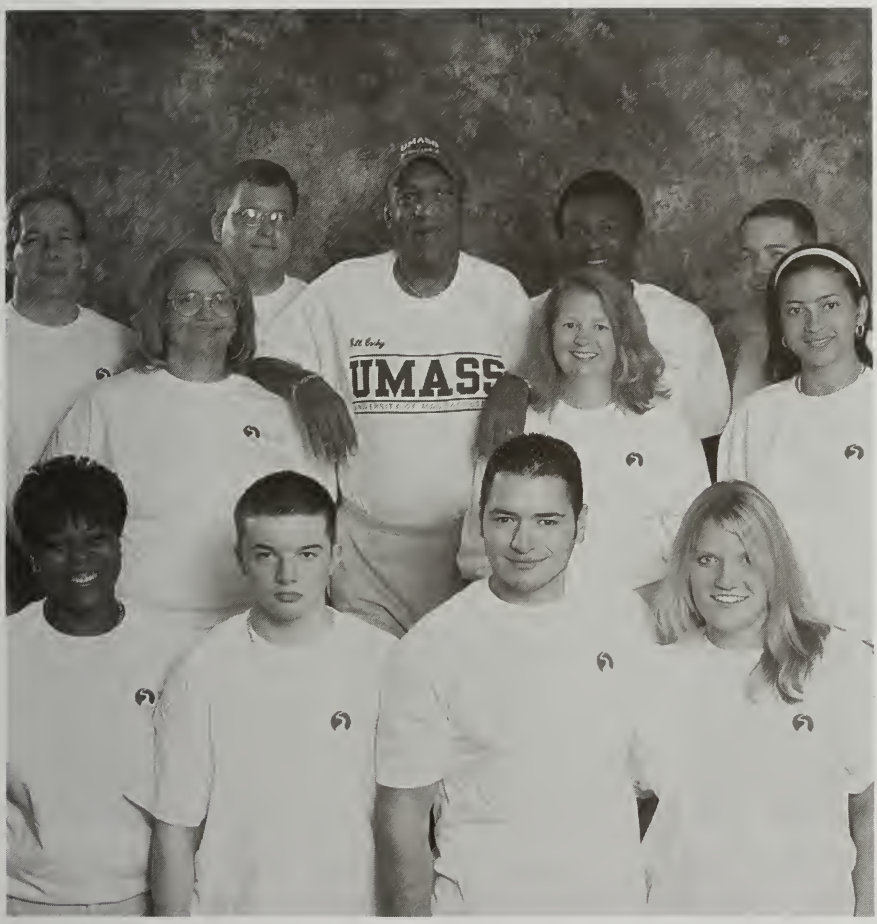

Dr. Bill Cosby, shown here with Mentor students, came to STCC to promote higher education and the value of community colleges, and to encourage students to continue their education to the bachelor's degree level or beyond. Mentor students assist other students in adjusting to the college environment, and often volunteer at college events.

Springfield Technical Community College
Board of Trustees

Bruce W. Stebbins
Chairman
Regional Manager
National Association of
Manufacturers

Mary McNally, Esq.
Vice Chairman
Law Offices of Mary E.
McNally

Roberta Page
Secretary
Principal
Page One Productions

Steven F. Bradley
Vice President,
Government Relations
Baystate Health

Dr. Celeste Budd-Jackson
School Improvement Officer
Springfield Public Schools

James D. Chadwell, Esq.
Boyd, Crear, Rabbitt P.C.

Ronald A. Copes
Vice President,
Community Relations
MassMutual

Therese H. DiGiacomo
Child Care Enrollment Assistant
Holyoke • Chicopee • Springfield
Head Start Inc.

David P. Fontaine
President
Fontaine Brothers Inc.

Lee Anne Herrick
OB Diagnostic Medical
Sonographer

Ali Mourad
Student Trustee

Massachusetts Board of Higher Education

Massachusetts public higher education is a system with a distinguished past, increasing and measurable accomplishments, and dedicated to being recognized as having one of the nation's most outstanding array of institutions. It comprises 15 community colleges, nine state colleges, and five campuses of the University of Massachusetts. The system exists to provide accessible, affordable, relevant, and rigorous programs that adapt to meet changing individual and societal needs for education and employment. The public system is committed to continuous improvement and accountability in all aspects of teaching and learning. The Board of Higher Education, together with each respective Board of Trustees, expects all students, faculty, and staff to be held to exacting standards in the performance of their roles and responsibilities.

The mission of the Board of Higher Education is to ensure that Massachusetts residents have the opportunity to benefit from a higher education that enriches their lives and advances their contributions to the civic life, economic development, and social progress of the Commonwealth. To that end, the programs and services of Massachusetts higher education must meet standards of quality commensurate with the benefits it promises and must be truly accessible to the people of the Commonwealth in all their diversity.

Stephen P. Tocco, Chairman
M.L. Strategies, LLC
Boston

Peter Alcock
Alcock Ltd. Partners
Weston

Jeanne-Marie Boylan
Boston Sand and Gravel
Boston

John C. Brockelman
Fidelity Investments
Boston

Matthew E. Carlin
Resource Options, Inc.
Needham

David P. Driscoll
Department of Education
Malden

Kathleen A. Kelley
Massachusetts Federation of Teachers
Boston

Shawn Robinson
Student Member
Northampton

Aaron D. Spencer
Uno Restaurant Corporation
West Roxbury

Richard Taylor
Taylor Smith Properties, Inc.
Boston

Karl E. White
MBTA Retirement Fund
Boston

Administrative Directory

Administrative Offices		
President	Dr. Ira H. Rubenzahl	16/233
Vice President, Academic Affairs	Stephen H. Keller	16/223
Vice Pres., Administration/CFO	Dr. Janet D. Wanczyk	16/203
Vice Pres., Economic & Business Devel.	Thomas A. Goodrow	15/1st
Vice Pres., Enroll. Mgmt./Student Aff.	Dr. Patrick E. Tigue	16/Adm.
Vice Pres., Human Resources, Multicultural Aff.	Myra D. Smith	16/245
Vice Pres., Institutional Advancement	Dr. Gail E. Carberry	16/331
Assistant to the President	Michael J. Suzor	16/231
Executive Assistant to the President	Ruthie Jablonski	16/233
Director of Public Relations and Publications	Setta McCabe	16/251
Deans of Academic Schools		
Arts, Humanities, and Social Sciences	Dr. Arlene Rodriguez	13/101
Business & Information Technologies	Leona R. Ittleman	2/215
Engineering Technologies	Adrienne Y. Smith	17/205
Liberal Arts Transfer & General Studies	Teresa Burr	17/210
Health	Michael Foss	20/204
Math, Sciences & Engineering Transfer	Dr. Robert Dickerman	17/315
Academic Affairs		
Assistant Vice President, Academic Affairs	Richard C. Parkin	16/3270
Assistant Vice President, Academic Affairs	Christina Tigue	
Registrar, Director of Academic Advising	Matthew Gravel	17/210
Director of Bilingual Services	Beatrice Szlajen (Part-time)	16/143
Director of Institutional Research	Dr. Lucie K. Lewis	16/323
Director of Cisco Systems Regional Academy & College Multimedia Services	Martin C. Benson	20/258
Director of Instructional Media Production	Vincent Yacovone	13/320k
Director of Student Success Center	Jane Alinovi	27/
Coordinator, Honors Program	Dr. Arlene Rodriguez	13/113
Continuing Education		
Dean, Continuing Education & Distance Learning	Debbie L. Bellucci	16/ 3rd
Director of Distance Education	James Lynch	17/243
Library Services		
Dean of Library Services	Tamson Ely	27/101
Reference Librarian	Barbara Wurtzel	27/121
Audiovisual Librarian	Lynn Kleindienst	27/121
Coordinator, Library Systems	Eric Warren	27/121
Catalog Librarian	Lynn Eaton	27/105
Verizon New England Next Step Program		
Program Administrator	Joseph Joyce Jr.	Technology Park
Business Manager	Gwynnetta Sneed	Technology Park
National Center for Telecommunications Technologies		
Chief Operations Officer	Dr. Joseph Joyce Jr.	Technology Park
Executive Director	Gordon F. Snyder, Jr.	Technology Park
Co-Principal investigator	James Downing	Technology Park
Co-Principal investigator	Gary Mullett	Technology Park
Staff Assistant	Nina Laurie	Technology Park

Administrative Services		
Asst.Vice President, Administration	Betty Ann Learned	16/201
Bursar	Joseph DaSilva	15/1st
Director of Security and Safety	David Siano	9/1st
Director of Facilities	Victor Focosi	7/206
Director of Accounting Services	Cathy Olson	16/203
Economic and Business Development		
Asst. Vice Pres./Economic and Bus. Development	Mary Breeding	SEC/Technology Park
Director, Springfield Business Incubator	Deborah King	SEC/Technology Park
Director, Special Projects	Diane Sabato	SEC/Technology Park
Director, Program Devel. & Professional Services	James Beane	2/108
Director, Sales, Marketing and Contract Training	Paula Goodreau	SEC/Technology Park
Director, NACCE	Heather Van Sickle	SEC/Technology Park
Enrollment Management / Student and Public Affairs		
Asst. Vice Pres., Admissions, Recruitment, Career Services	Louisa Davis-Freeman	27/1st
Asst. Vice Pres., Enroll. Mgmt./Student Affairs	Raymond Blair	
Director of Returning Adult Services	Susan Soffen	27/1st
Director of Co-Op/Career Placement-Transfer	Pamela White	27/265
Director of Health Services	Jonathan Miller	20/320C
Director of Athletics	J. Vincent Grassetti	02/G07
Director of Marketing	Joan Thomas	16/1st
Coordinator of Testing	Joanne Abodeeb	17/423
Coordinator of Disabilities Services/ADA	Mary A. Moriarty	27/258
Coordinator of Student Activities and Development	Andrea B. Tarpey	20/112
Coordinator, Tech Prep	Cindy Nothe	16/104
Financial Aid		
Coordinator of Financial Aid Services	Mary Forni	16/285
Coordinator of Financial Aid Operations	Marilyn Sutin	16/285
Institutional Advancement		
Asst. Vice Pres., Institutional Advancement	Steven Budd	16/343
Director of Special Administrative Projects	Jack O'Neill	16/
Grants Manager	Nate Leveille	16/351
STCC Foundation/Alumni Relations		
Executive Director	William Kwolek	16/351A
Alumni Relations Coordinator	Micaela McDonald	16/351
Information Technology		
Chief Information Technology Officer	Eileen Cusick	2/302
Assistant Chief Info. Tech. Offcer	David Ferry	2/302
Assoc. Dir. of Admin. Computing/ Telephone Network	Mark Curto	2/103C
Assistant Director/Administrative Computing	Ann Pandolfi	2/101
Technical Lab. Coord./Acad. Comp.	Carlos Pedro	2/302

Department Chairs/Program Coordinators

Automotive Technology	Raymond Sbriscia	25/200
Biological Sciences	Carole Dupont	2/531
Biotechnology	Lisa Rapp	2/515
Business Administration	Paul Thornton, Michael Farrell, Robert Rodgers (Acting)	2/213
Chemistry	Rafael Hidalgo-Quesada	17/331
Civil Engineering Technology	Theodore Sussmann	17/343
Clinical Laboratory Science	Susan Schneider	20/352
Computer Systems Engineering Technology	Rick Jagodowski, Gary Mullett	17/635
Computer Science Transfer	Zahi Haddad	17/309
Cosmetology	Marilyn Rovelli	20/420
Dental Assistant	Carol Giaquinto	20/203
Dental Hygiene	Carol Szlachetka	20/240
Developmental English	David Winsper	13/217
Diagnostic Medical Imaging	Richard Serino	20/302D
Nuclear Medicine	Richard Serino	20/302D
Radiography	Anthony Kapadoukakis	20/302F
Sonography	Avis Vincensi	20/302E
Digital Media Production	LuAnne Carbaugh	2/716
Electrical Engineering Technology	Douglas Buckley	20/120
Electronic Systems Engineering Technology	Rick Jagodowski, Gary Mullett	17/635
Energy Systems Technology	Robert Bujak	32/103
Engineering and Science Transfer	Zahi Haddad	17/309
English	John Gately	13/210
English as a Second Language	Jean Zenor	13/302
Foreign Languages	Anne Bonemery	13/323
General Studies	Marcia Sias	13/223
Graphic Arts Technology	Raymond Fontaine	14/204
Information Technologies	Linda Meccouri (Acting)	2/212
Computer Information Technologies	Lillian Beauchemin (Acting)	2/212
Health Information Technologies	Eileen Cassidy (Acting)	2/214
Office Information Technologies	Linda Belton (Acting)	2/214
Integrative Health Care	Bernadette Della Bitta Nicholson	20/302N
Massage Therapy	Bernadette Della Bitta Nicholson	20/302N
Interdisciplinary Health Studies	Cindy Fuller	20/418
Landscape Design and Management Tech.	Barbara Schaedler	17/339
Laser Electro-Optics Technology	Rick Jagodowski, Gary Mullett	17/635
Law Enforcement/Criminal Justice	Bert Scannapieco	17/225
Liberal Arts Transfer	Mary Donovan	2/525
Mathematics	Lauren Brewer/Julianne Kinsman	17/412
Mechanical Engineering Technology	Gary Masciadrelli	17/213
Medical Assistant	(pending)	20/514
Music	Kenneth Forfia	13/115
Nursing	Mary Tarbell	20/209
Occupational Therapy Assistant	Marianne Joyce	20/225
Physical Therapist Assistant	Linda Desmarais	20/322
Physics	Margaret McCarthy	17/311
Respiratory Care	Lee Robinson	20/516
Social Sciences	Louis Gentile	17/231
Surgical Technology	Paula Hutchinson	20/344
Teacher Education Transfer	Lynne Quintin	13/329
Telecommunications Technology	Rick Jagodowski, Gary Mullett	17/635
Visual and Performing Arts	Lawrence Slezak	28/200

Administration, Faculty, and Professional Staff

Abodeeb, Joanne, B.A., University of Massachusetts; Coordinator of Testing

Albano, Roberta, A.S., Westbrook College; R.D.H., B.A., Springfield College; M.Ed., Springfield College; Dental Assistant

Alinovi, Jane, A.A.,Springfield Technical Community College; B.A., Mt. Holyoke College; M.Ed., University of Massachusetts; J.D., Western New England College; Director of Student Success Center

Alves, Jason, A.S., Springfield Technical Community College; Network Technician, Administrative Computing

Ammann, William, B.A., St. Anselm College; M.A., Boston College; M.B.A., Western New England College; Help Desk Trainer, Administrative Computing

Andersen, James, B.S., University of Bridgeport; M.Ed., Westfield State College; Mass. Certification in Adult Education; Worcester State College; Developmental English

Andrew, Kathleen, B.A., Trinity College; M.A., Boston College; Developmental English

Barufaldi, Paul, A.S., Springfield Technical Community College; B.A., American International College; M.A., Westfield State College; Electronic Systems Engineering Technology

Beane, James M., A.S., STCC; B.S.B.A., Western New England College; Director, Program Develoment and Professional Services, Division of Economic and Business Development

*Beauchemin, Lillian, B.S.B.A., Western New England College; M.S., Western New England College; Information Technologies, Computer Information Technology

Bedinelli, Donna, A.A., Springfield Technical Community College; B.S., American International College; M.S., University of Massachusetts; Mathematics

Belemjian, Rhoda, B.S., Western New England College; M.B.A., Western New England College; Business Administration

Bellucci, Debbie L., A.S., Springfield Technical Community College; B.S., Western New England College; M.B.A., Western New England College; Executive Director, STCC Foundation Press; Program Administrator, Microsoft Regional Academy; Dean, Continuing Education and Distance Learning

*Belton, Linda, A.S., Springfield Technical Community College; B.S., American International College; M.Ed., Cambridge College; Office Information Technology

Benson, Martin, B.S., Towson State University; M.A.T., School for International Training; Ed.S., Utah State University; Director of Cisco Systems Regional Academy and College Multimedia Services

Bergeron, Diane R., B.S., St. Michael's College; M.S., University of Vermont; Mathematics

Bessette, Roger, Jr., B.S.B.A., Western New England College; Staff Assistant, Administrative Services

Betke, Elizabeth, B.A., SUNY Buffalo; M.S., SUNY Buffalo; D.Ed., University of Massachusetts; Occupational Therapy Assistant

Bigos, Edward, B.S.E.E., Western New England College; Computer Systems Engineering Technology

Blair, Raymond, B.A., University of Massachusetts; M.Ed., Springfield College; CAGS, Springfield College; Assistant Vice President, Enrollment Management/ Student Affairs

Blanchette, Marcia J., B.A., Emmanuel College; M.A., Central Connecticut State University; Social Sciences

*Bonemery, Anne M., A.S., Springfield Technical Community College; B.A., American International College; M.A.T., American International College; Certified in English, Bilingual English, Spanish, Bilingual Spanish, French, Bilingual French; Foreign Languages

Breeding, Mary M., B.S., University of Florida; M.S., Virginia Commonwealth University; Assistant Vice President, Economic and Business Development

*Brewer, Lauren, B.S., University of Massachusetts; M.S., University of Massachusetts; Mathematics

Brown, Jeanette, A.A., Springfield Technical Community College; A.S., Springfield Technical Community College; B.A., University of Massachusetts; M.Ed., University ot Massachusetts; Transfer Counselor, Student Support Services

Bruen, Robert D., B.S., Northeastern University; M.S., Boston University; M.S., Simmons College; M.S., Harvard University; Ph.D., Boston College; Computer Information Technologies

*Buckley, Douglas M., A.S., Springfield Technical Community College; B.S., Westfield State College; Voc. Ed. Cert. in Electronics; M.Ed., Westfield State College; Electrical Engineering Technology

Budd, Steven, B.S., University of Massachusetts; MBA, University of Massachusetts; Assistant Vice President, Institutional Advancement

*Bujak, Robert J., A.S., Springfield Technical Community College; B.S., Central Connecticut State College; M.Ed., Westfield State College; Energy Systems Technology

Burns, Richard F., B.S., University of Massachusetts; M.A.T., American International College; Mathematics

Burr, Teresa A., B.S., Springfield College; M.Ed., Springfield College; Dean, Liberal Arts Transfer and General Studies

Camerota, Nicholas, B.A., American International College; M.A., American International College; Social Sciences

Capdeville, Michelle, B.S., Western New England College; Staff Assistant, Special Administrative Projects

*Carbaugh, LuAnne H., B.A., University of Washington; M.Ed., University of Massachusetts; Digital Media Production

Carberry, Gail, Cert., Springfield Technical Community College; B.S.Ed., State College at Worcester; M.Ed., University of Massachusetts; Ed.D., University of Massachusetts; Vice President, Institutional Advancement

Carey, Walter H., B.S., University of Massachusetts; M.S., University of Massachusetts; Ph.D., University of Massachusetts; Biological Sciences

Carpenter, Deborah, B.A., American International College; M.S., American International College; Title III Community Outreach Coordinator

Carras, Elizabeth, B.A., University of Massachusetts; M.A., Elms College; English as a Second Language

*Cassidy, Eileen C., B.S., American International College; M.A. American International College; CCS-P, National Court Reporters Association; Health Information Technologies

Cebula, Eileen, B.A., Elms College; M.S., University of Massachusetts; CAGS, American International College; Developmental English

Colwell, Mary C., A.S., Berkshire Community College; B.S., University of Massachusetts; M.S., University of Massachusetts; CAGS, University of Massachusetts; Nursing

Connell, John H., B.S., Massachusetts Institute of Technology; Ph.D., University of Washington; Professor Emeritus

Cronin, Marion, National Certificate in Computer Programming, National Diploma in Business Information Technology, Letterkenny Regional Technical College; Ireland; Programmer/Analyst, Administrative Computing

Curto, Mark, A.S., Springfield Technical Community College; Associate Director of Administrative Computing/Telephone Network

Cusick, Eileen, B.S.B.A., University of Massachusetts; M.B.A., Western New England College; Chief Information Technology Officer

Czech, David, A.S., Springfield Technical Community College; Computer Programmer, Computer Services

Czuchra, Kenneth, A.S., Springfield Technical Community College; Lab Coordinator/Technician; School of Arts, Humanities and Social Sciences

DaSilva, Joseph, A.S., Holyoke Community College; B.S., Western New England College; Bursar

Davis-Freeman, Louisa, B.S., Springfield College; M.Ed., Springfield College; C.A.G.S., Springfield College; Assistant Vice President, Admissions, Recruitment, and Career Services

*Della Bitta Nicholson, Bernadette, B.S., Springfield College; Bancroft School of Massage Therapy; M.S., Springfield College; Massage Therapy

*Desmarais, Linda C., B.S., Simmons College; Registered Physical Therapist; M.P.H., University of Massachusetts; Physical Therapist Assistant

Dickerman, Robert W., B.A., Kenyon College; M.S., Rutgers University; Ph.D., University of Illinois; Biological Sciences, Dean, School of Math, Sciences, and Engineering Transfer

DiVenuto, Virginia, B.S., University of Massachusetts; Staff Assistant, Engineering & Science Transfer

*Donovan, Mary H., B.A., Ohio University; M.A., Ohio University; Sociology/ Anthropology, Liberal Arts Transfer

Downing, James, A.S., Springfield Technical Community College; A.S., STCC; B.S., Western New England College; M.S., Western New England College; Telecommunications Technology; Co-Principal Investigator, National Center for Telecommunications Technologies

Dunn, Gail Pederzoli, B.A., Elmira College; M.A., University of Wisconsin; M.Ed., Springfield College; English

Dunn, John H., B.A., American International College; M.A., University of Massachusetts; Executive Vice President Emeritus

*Dupont, Carole, B.A., American International College; M.A., American International College; Biological Sciences

Eaton, Lynn, B.A., Bridgewater State College; M.L.I.S., University of Rhode Island; Cataloger/Head of Technical Services, Library

Ely, Tamson M., B.A., Goucher College; M.S., Simmons College; M.A., University of Massachusetts; Dean of Library Services

Emerson, Daniel J., B.A. in English, University of Colorado; B.A. in Neuroscience and Psychology, University of Colorado; M.A., Northeastern University; English

Farley, Carole, B.S., American International College; M.Ed., American International College; Office Information Technologies

*Farrell, Michael J., B.A., American International College; M.B.A., American International College; Business Administration

Fern, Michael, A.S., Springfield Technical Community College; Manager of Building Services

Ferry, David, A.S., Springfield Technical Community College; Assistant Chief Information Technology Officer

Fish, Arthur, Help Desk Coordinator, Administrative Computing

Fitzgerald, Marie Andree, B.A., Trinity College; M.Ed., Cambridge College; CRI, National Court Reporters Association; Office Information Technology

Focosi, Victor T., Director, Facilities

*Fontaine, Raymond, A.A., Holyoke Community College; A.S., Springfield Technical Community College; B.A., University of Massachusetts; Graphic Arts Technology

Forfia, Kenneth, B.A., University of Massachusetts; M.A., University of Massachusetts; Visual and Performing Arts

Forni, Mary A., B.A., American International College; M.Ed., University of Massachusetts; Coordinator of Financial Aid Services

Foss, Michael C., A.S., Pensacola Junior College; B.A., University of South Florida; M.Ed., University of South Florida; R.D.M.S., R.V.T., American Registry of Diagnostic Medical Sonographers; Dean, School of Health

Fugiel, Lisa A., ANCC Certification, R.N., B.S.N., Salem State College; M.S.N., University of Phoenix; Nursing

*Fuller, Cindy, A.S., Springfield Technical Community College; B.S., Elms College; M.Ed., University of Massachusetts; Interdisciplinary Health Studies

Gallo, Anna, B.A., SUNY College at Potsdam; B.S., Rochester Institute of Technology; CNMT; M.B.A., Rochester Institute of Technology; Coordinator of Professional Development; Business and Information Technologies

*Gately, John F., B.A., University of Massachusetts; M.A.T., University of Massachusetts; English

*Gentile, Louis A., B.S., American International College; M.S., Springfield College; Ph.D., University of Maryland; Social Sciences

*Giaquinto, Carol, A.S., Springfield Technical Community College; B.S., University of Massachusetts; M.Ed., Westfield State College; Dental Assistant

Glanville, Theresa, A.S.N., Cape Cod Community College; B.S.N., American International College; M.S.N., University of Massachusetts; Nursing

Godfrey, John J., B.A., American International College; M.B.A., Western New England College; Business Administration

Goodreau, Paula J., A.S., Springfield Technical Community College; B.S., American International College; M.B.A., American International College; Director of Sales, Marketing, and Contract Training, Division of Economic and Business Development

Goodrow, Thomas A., A.S., Springfield Technical Community College; B.S., University of Massachusetts; M.Ed., Springfield College; Vice President, Economic and Business Development

Grassetti, Jack Vincent, B.S., Springfield College; M.Ed., Westfield State College; Director of Athletics

Gravel, Matthew S., B.A., University of Massachusetts/Dartmouth; Ed.M., Harvard University; Registrar

Greene, Pamela B., A.A., Mt. Ida Jr. College; B.A., Universidad de las Americas; M.A., University of Massachusetts; English as a Second Language

Groeneveld, Leonard, B.A., Colgate University; M.S., University of Rhode Island; M.S., Florida State University; Mathematics

Gross, Cecelia, A.B., Howard University; M.A., Grinnell College; Social Sciences

Gustavson, Carl, A.S., Springfield Technical Community College; Tech. Lab Coordinator, Physics

*Haddad, Zahi, A.S., Springfield Technical Community College; B.S., Western New England College; M.S.E.E., Worcester Polytechnic Institute; Engineering & Science Transfer

Hall, Warren S., B.F.A., Massachusetts College of Art; M.S., University of Massachusetts; Civil Engineering Technology

Hall-Gibbons, Shelby, B.S., American International College; M.Ed., Springfield College; CAGS, Springfield College; Counselor

Hanrahan, Patricia, B.S. Salve Regina College; M.A., University of Massachusetts; Ph.D., University of Massachusetts; Director of Clinical Education

Harrington, Linda Shea, B.A., Our Lady of the Elms College; M.A., Westfield State College; English

Harrington, Sheila, B.A., University of Massachusetts; M.Ed., Westfield State College; Academic Coordinator, Student Support Services

Hebert, Daniel C., B.A., Western New England College; B.S.B.A., Western New England College; J.D., Western New England College; Member of Massachusetts Bar and Florida Bar; Law Enforcement/Criminal Justice

Henriques, Constance, A.S., Springfield Technical Community College; Help Desk Technician, Disability Services

* Hidalgo-Quesada, Rafael M., B.S., University of Costa Rica; M.S., University of Costa Rica; Ph.D., Northeastern University; Chemistry

Hilton, Sharon, B.S.D.H., Old Dominion College; M.Ed., Westfield State College; Dental Hygiene

Hui, Richard, A.S., Springfield Technical Community College; PC/LAN Support Technician, Administrative Computing

*Hutchinson, Paula A., A.D.N., Quinsigamond Community College; B.S.N., Assumption College; M.B.A., Boston University; Surgical Technology

Ittleman, Leona R., B.A., American International College; J.D., Western New England College School of Law; Dean, School of Business and Information Technologies

Jablonski, Ruthie, B.S., Elms College; Executive Assistant to the President

*Jagodowski, Richard, B.S.E.E., Western New England College; M.S.E.E., Western New England College; Electronic Systems Engineering Technology, Electronics Cluster

Jimenez, Juan, B.S., University of Massachusetts; M.Ed., University of Massachusetts; D.Ed., University of Massachusetts; Mathematics

Johnson, Davis, B.A., St. Louis University; M.Ed., University of Massachusetts; English

Joyce, Joseph, Jr., A.B., Fairfield University; M.A., University of Southern California; Ph.D., University of Southern California; Program Administrator, Verizon New England Next Step Program and Chief Operations Officer, National Center for Telecommunications Technologies

*Joyce, Marianne, A.A., Cape Cod Community College; A.S., North Shore Community College; B.S., Stonehill College; M.A., Westfield State College; Occupational Therapy Assistant

*Kapadoukakis, Anthony, Certificate, Mass. General Hospital; B.S., American Institute of Holistic Theology; M.Ed., Cambridge College; Ph.D., American Institute of Holistic Theology; Radiography

Karnik, Arvind, B.S.E.E., University of Bombay; M.S.E.E., State University of New Jersey; M.S.E.E., Rensselaer Polytechnic Institute; Electronic Systems Engineering Technology

Keane, Marion, National Diploma in Business Information Technology, National Certificate in Computer Programming, Letterkenny Regional Technical College, Ireland; Title III Computer Programmer

Keller, Stephen H., B.A., College of the Holy Cross; M.A., Trinity College; Vice President, Academic Affairs

King, Deborah, B.S., University of Vermont; M.S., Rensselaer Polytechnic Institute; Director, Springfield Business Incubator, Andrew M. Scibelli Enterprise Center

*Kinsman, Julianne, B.A., University of Massachusetts; M.Ed., University of Massachusetts; Mathematics

Kleindienst, D. Lynn, B.A., Westfield State College; M.L.I.S., University of Rhode Island; Audio-Visual Librarian

Korzec, Michael, A.S., Springfield Technical Community College; Staff Assistant, Computer Services

Kozuch, Kris, B.S., Springfield College; M.Ed., Springfield College; Accommodations Specialist, Office of Disability Services

Kwolek, William A., B.S., Gannon University; Executive Director, STCC Foundation

LaFrancis, John S., A.S., Springfield Technical Community College; B.S., Central Connecticut State University; M.Ed., Westfield State College; Mechanical Engineering Technology

Lamontagne, Clare F., A.S., Springfield Technical Community College; B.S.N., American International College; M.S., University of Connecticut; Nursing

Laurie, Nina C., A.A., Holyoke Community College; B.A., Mount Holyoke College; M.S., University of Massachusetts; Staff Assistant, National Center for Telecommunications Technologies

Learned, Betty Ann, A.S., Springfield Technical Community College; B.A., Worcester State College; M.B.A., American International College; Assistant Vice President, Administrative Services

Leslie, George J., A.B., Holy Cross College; M.S., University of Detroit; M.Ed., Westfield State College; Ed.D., University of Massachusetts; Biological Sciences

Lewis, Lucie, B.S., American International College; M.Ed., Springfield College; Ed.D., William Howard Taft University; Director of Institutional Research

Lukas, Cheryl, B.F.A., Massachusetts College of Art; M.Ed., American International College; Graphic Arts Technology

Lukis, Kenneth M., B.A., St. Anselm College; M.S., Holy Cross College; Ph.D., University of Pittsburgh; Chemistry

Luvera, Patricia, Mansfield Academy; Mass. Board of Cosmetology Certified Instructor; Cosmetology

Lynch, James, A.S., Johnson & Wales University; A.S., Springfield Technical Community College; A.S., STCC; Director of Distance Education

Magala, Michael D., B.A., Eastern Connecticut State University; M.A., University of Connecticut; Social Sciences

Maia, Edward A., Director of Custodial Services

*Magnier, Jean-Marie, B.S., Colgate University; M.S., University of Massachusetts; Mathematics

Martinez, Nitza B., B.A., University of Masscahusetts; J.D., Western New England College School of Law; Academic Outreach Counselor, Title III

Maruca, ToniAnn, B.S., Westfield State College; Post-Secondary Transitions Coordinator/Counselor, Adult Basic Education Center

*Masciadrelli, Gary, B.S., Western New England College; M.S.M.E., Rennselaer Polytechnic Institute; Mechanical Engineering Technology

Massa, Nicholas A., B.S., Western New England College, M.S., Western New England College; Ph.D., University of Connecticut; Laser Electro-Optics Technology

Maynard, Andrew R., B.S., SUNY Maritime University; M.B.A., Adelphi University; Computer Information Technologies

Mazeika, Martha, B.A., University of Massachusetts/Dartmouth; M.Ed., Springfield College; Academic Advisor, Title III

McCabe, Setta, B.A., Simmons College; M.B.A., Western New England College; Director of Public Relations and Publications

McCarthy, Beverly I., A.S., Berkshire Community College; B.S., Salem State College; M.A.T., American International College; Ed.D., University of Massachusetts; CRI, CPE, National Court Reporters Association; Office Information Technologies

*McCarthy, Margaret E., A.B., Wheaton College; M.S., University of Pittsburgh; M.S., University of Massachusetts; Ph.D., University of Massachusetts; Physics

McClure, Patricia, B.S., American International College; M.B.A., American International College; Business Administration

McColgan, Jacqueline, B.S.N., Lowell State; M.S.N., Boston University; Nursing

McLaughlin, Kathleen, Diploma, Baystate Medical Center School of Nursing; B.S., Fitchburg State College; M.S.N., University of Massachusetts; Nursing

*Meccouri, Linda L., M.Ed., Antioch University; Ph.D., University of New Mexico; Information Technologies

Mendez, Regina (Jill), B.A., Fairleigh Dickinson University; M.A., Fairleigh Dickinson University; M.A.T., Fairleigh Dickinson University; English as a Second Language

Merrill, Karen, A.S., Springfield Technical Community College; Facilities Liaison Administrator

Meunier-Pare, Mary Jo, A.S., Holyoke Community College; B.S.N., American International College; M.S.N., University of Massachusetts; Nursing

Miller, Jonathan L., A.S., Springfield Technical Community College; B.S., Western New England College; Physician Assistant cert., Springfield College; Director of Health Services

Moriarty, Mary A., B.A., University of Massachusetts; M.Ed., Springfield College; C.A.G.S., Springfield College; Coordinator of Disabled Student Services/ADA *(sabbatical leave 2005)*

*Mullett, Gary J., B.S.E.E., University of Massachusetts; M.S.E.E., University of Massachusetts; Electronics Technology Cluster; Co-Principal Investigator, National Center for Telecommunications Technologies

Nicoli, Jo-Ann, B.S., Salem State College; M.Ed., University of Massachusetts; Certification for School Psychologist, Westfield State College; Office Information Technologies

Nieves, Christina Impoco, A.D.N., Palm Beach Community College; B.S.N., University of Massachusetts; M.S.N., University of Massachusetts; Nursing

Nothe, Cindy A., B.A., Assumption College; M.S., American International College; Tech Prep Coordinator

O'Brien, Maureen Hogan, B.A., University of Connecticut; M.Ed., Harvard University; Developmental English *(sabbatical leave spring 2006)*

O'Leary, Mary E., R.N., Providence Hospital School of Nursing; B.S., Boston College: M.S., Boston College; J.D., Western New England College; Ed.D., University of Massachusetts; Dean Emeritus

Olmsted, Gail, B.S., Central Connecticut State University; M.B.A., University of New Haven; Business Administration

Olson, Catherine, B.S.B.A., Western New England College; Director of Accounting Services

O'Neill, Jack R.F.K., Director of Special Administrative Projects

Ortiz, Yaritza, A+ Certification; Center for Business and Technology

Panagiotou, George, A.S., Quinsigamond Community College; Certificate, Ford ASSET; ASE Certified Master Automobile Technician, ASE Certified Master Medium and Heavy Truck Technician; ASE Level 1 Advanced Engine Performance Certificate Ford Electrical, Ford Drivability, and STST in Advanced Transmissions.

Pandolfi, Ann L., A.S., Springfield Technical Community College; Assistant Director, Administrative Computing

Parenteau, Robert, B.B.A., Western New England College; B.A., Southwestern College; B.S., Westfield State College; M.Ed., University of Massachusetts; M.Div., Yale Divinity School; Mathematics

Parkin, Richard C., B.A., American International College; M.A., Bowling Green State University; C.A.G.S., Carnegie-Mellon University; Assistant Vice President, Academic Affairs

Paterwic, Lori Ann, B.A., Assumption College; M.A., Assumption College; Associate Program Administrator, Verizon New England Next Step Program

Pedro, Carlos, A.S., Springfield Technical Community College; B.S.B.A., Western New England College; Technical Lab Coordinator, Academic Computing

Pennino, Bruce J., B.S.C.E., Bucknell University; M.S.C.E., Colorado State University; Civil Engineering Technology

Petit, Kenneth E., B.S., Kent State University; M.S., Southern Connecticut State University; Biological Sciences

Pettengill, Cornelia, A.S., Springfield Technical Community College; B.S., University of Massachusetts; M.Ed., University of Massachusetts; School of Health

Piccus, Megan C., B.S., University of Massachusetts; M.S., Rennselaer Polytechnic Institute; Mechanical Engineering Technology

Pickett, Nancy, B.A., Mount Holyoke College; M.A., Mount Holyoke College; English

Poe, Brandon H., B.S., University of North Carolina Chapel Hill; Ph.D., Wake Forest University School of Medicine; Biological Sciences

Powers, Thomas H., B.F.A., Maryland Institute College of Art; M.F.A., Queens College; Digital Media Production

Pryor, Dorothy Jordan, A.B., Fisk University; M.A., University of Chicago; Professor Emeritus

*Quintin, Lynne D., B.A., Elms College; M.Ed., American International College; Ed.D., Johnson and Wales University; Teacher Education Transfer

Rapoport, Nancy D., A.B., University of Rochester; M.S., University of Pennsylvania; M.S., University of Massachusetts; Biological Sciences, Biotechnology

*Rapp, Lisa, B.S., University of Massachusetts, Ph.D., University of Connecticut; Biological Sciences, Biotechnology

Raverta, Sharon, B.A., American International College; M.S.T., American International College; Biological Sciences

Rice, Dennison G., B.A., Calvin Coolidge College; M.A., Emerson College; English

Rivera-Sablak, Myrna, B.S., American International College; M.Ed., American International College; Coordinator of Student Success Services

*Robinson, Lee, R.R.T. A.S., Triton Jr. College; B.A., Westfield State College; M.Ed., Westfield State College; Respiratory Care

* Rodgers, Robert, B.A., University of Massachusetts; J.D., Northeastern University School of Law, Member of Massachusetts Bar; Business Administration

Rodriguez, Arlene, B.A., Fordham University; M.A., Lehigh University; Ph.D., University of Massachusetts; Dean, School of Arts, Humanities, and Social Sciences; Coordinator, Honors Program

Rossi, Michael V., B.A., University of Hartford; M.Ed., Springfield College; Admissions Counselor

*Rovelli, Marilyn, A.A., Springfield Technical Community College; Mass. Board of Cosmetology Certified Instructor; B.S., Westfield State College; Cosmetology

Ruderman, Philip, A.A.S., Rochester Institute of Technology; B.S., Rochester Institute of Technology; M.S., Rochester Institute of Technology; Graphic Arts Technology

Ryan, Denise, R.D.H., Forsyth School of Dental Hygiene; B.S., Boston University; M.S., Columbia University; Dental Hygiene

Ryoppy-Pori, Tuula, A.A., Holyoke Community College; B.A., Smith College; M.A.T., Elms College; English as a Second Language

Sabato, Diane, A.S., Springfield Technical Community College; B.A., University of Manitoba; Director of STCC Entrepreneurial Institute

Sainsbury, Diane G., B.S.M.E., Union College; M.B.A., University of Massachusetts; Mechanical Engineering Technology

Salz, Henry, B.S., University of Mexico; M.S., Massachusetts Institute of Technology; Ph.D., Massachusetts Institute of Technology; Physics

Sasser, Tara, B.A., Springfield College; M.Ed., Springfield College; Counselor for Students with Disabilities

Sausville, Sherry, B.A., American International College; M.Ed., American International College; C.A.G.S., American International College; Developmental English

*Sbriscia, Raymond, A.S., Springfield Technical Community College; B.S., Fitchburg State College; Master Certification/Advanced Engine Performance, Automotive Service Excellence (ASE); Automotive Technology

*Scannapieco, Bert, B.A., American International College; J.D., Western New England College School of Law, Member of Massachusetts Bar; Law Enforcement/Criminal Justice

*Schaedler, Barbara M., A.A.S., SUNY Farmingdale; B.S., University of Georgia; M.A., New School of Social Research; Landscape Design and Management Technology

*Schneider, Susan A., B.S., University of Lowell; Clinical Laboratory Science

Scibelli, Andrew M., B.A., St. Anselm's College; M.Ed., Boston State College; Ed.D., University of Massachusetts; President Emeritus

Seligman, Esther, R.R.T., A.S., Springfield Technical Community College; B.A., University of Massachusetts; Respiratory Care

*Serino, Richard, A.S., Yale/New Haven; B.S., Worcester State College; M.Ed., Worcester State College; Nuclear Medicine

Shemesh,Yaakov, A.S., Hartford State Technical College; B.S. University of Hartford; M.S., Brandeis University; Computer Information Technologies

Sheng, Xiaoling (Sharon), B.S., Beijing University of Technology; M.E., Beijing University of Technology; Ph.D., Tulane University; Engineering and Science Transfer

Siano, David, A.S., Springfield Technical Community College; B.S., American International College; Director of Security and Safety

*Sias, Marcia, B.A., Westfield State College; M.A., Westfield State College; English, Chairperson and Curriculum Coordinator, General Studies

Siciliano, Michael, B.S., Western New England College; M.Ed., Westfield State College; Energy Systems Technology

Silvestri, Antonio, B.S.E.E., Western New England College; M.S.C.O.I.N.S., University of Massachusetts; M.S.E.E., Western New England College; Engineering and Science Transfer

*Slezak, Lawrence, B.S., State University of New York; M.F.A., University of Massachusetts; Amy H. Carberry Fine Arts Gallery Director; Visual and Performing Arts

Smith, Adrienne Y., B.S.E.E., Western New England College; Master of Engineering Management, Western New England College; Dean, School of Engineering Technologies

Smith, Myra D., B.S., Springfield College; M.Ed., Cambridge College; Vice President, Human Resources and Multicultural Affairs

Smith, Vonetta M., B.A., Hampton University; Staff Assistant, Admissions

Sneed, Gwynnetta J., B.S., Florida A&M University; M.S., Florida A&M University; Business Manager, Verizon New England Next Step Program

Snyder, Gordon F., Jr., B.S.M., University of Massachusetts; B.S.M.T., University of Massachusetts; M.S.E.E., Western New England College; Electronic Systems Engineering Technology; Executive Director, National Center for Telecommunications Technologies

Soares, Eliano, A.S., Springfield Technical Community College; Staff Assistant/ Electronic Systems Engineering Technology

Soares, Ramiro, A.S., Springfield Technical Community College; Master Certification, Automotive Service Excellence (ASE); Staff Assistant, Automotive Technology

Soffen, Susan, B.A., American International College; M.Ed., University of Massachusetts; Director of Returning Adult Services, Adult Education Center

Strzempko, Monica N., B.A., Boston University; M.S., Northeastern University; MA Teachers Certification in Biology; Biological Sciences

Sturtevant, Richard, A.S., Berkshire Community College; B.S.E.E., University of Massachusetts; M.Ed., Westfield State College; Electrical Engineering Technology

Sullivan, Mary, B.S.N., St. Anselm College; M.S.N., University of Massachusetts; Nursing

Sullivan, Noreen P., A.S., Springfield Technical Community College; B.S., Westfield State College; M.Ed., American International College; Medical Assistant

*Sussmann, Theodore R., A.S., Springfield Technical Community College; BSCE, University of Massachusetts; MSCE, University of Massachusetts; Ph.D., University of Massachusetts; Civil Engineering Technology

Sutin, Marilyn, B.A., Richmond College; M.Ed., Springfield College; Coordinator of Financial Aid Operations

Suzor, Michael J., B.A., College of the Holy Cross; M.A., Columbia University; M.Ed., Columbia University; Assistant to the President

Szlachetka, Carol, A.S., Springfield Technical Community College; B.S., Westfield State College; M.N.S., Worcester Polytechnic Institute, Dental Hygiene

Szumowski, Margaret, B.A., University of Iowa; M.A., University of Wisconsin; M.F.A., University of Massachusetts; English

Tamarkin, Dawn A., Manchester Community College; B.S., Union College; Ph.D., University of Arizona; Biological Sciences *(sabbatical leave 2005)*

*Tarbell, Mary, A.S., Springfield Technical Community College; B.S.N., American International College; M.S.N., Saint Joseph College; Director of Nursing

Tarpey, Andrea B., B.A., Western New England College; M.Ed., Springfield College; Coordinator of Student Activities and Development

Tchanukvadze, Ia, B.A., Tblisi State University; B.A., Williams College; Staff Assistant, Title III

Tenerowicz, Michael, A.S., Holyoke Community College; B.S., American International College; M.B.A., American International College; Business Administration

Tenczar, Julian, A.S., Springfield Technical Community College; Staff Assistant, Engineering Technologies

Thomas, Joan, A.S., Springfield Technical Community College; B.A., Smith College; Director of Marketing

Thomes, Karen Polastry, A.A., Springfield Technical Community College; B.A., Smith College; M.Ed., Cambridge College; Academic Counselor, Student Support Services

* Thornton, Paul B., B.A., Ohio University; M.Ed., Suffolk University; MBA, American International College; Business Administration

Tigue, Christina, B.S., Salem State College; M.S., Syracuse University; Assistant Vice President, Academic Affairs

Tigue, Patrick, B.A., Framingham State College; M.S., Syracuse University; Ed.D., University of Massachusetts; Vice President, Enrollment Management/Student Affairs

Tipaldi, Elizabeth, B.S., University of Connecticut; M.Ed., Springfield College; Mass. re-certification in English, reading, history; Developmental English

Tomkiel, Diane, Cosmetology Certificate, Springfield Technical Community College; Mass. Board of Cosmetology Certified Instructor; Cosmetology

Trader, Sandra, B.A., University of Connecticut; M.S.O.D.,American International College; Career Counselor, Student Support Services

Tyminski, Claire, Saint Joseph's College; M.Ed., Cambridge College; Medical Assistant

*Vangel, Peter, A.S., Springfield Technical Community College; B.S., University of Massachusetts; M.S.E.E., Rensselaer Polytechnic Institute; Laser Electro-Optics Technology

Vigorita, Valerie, B.A., American International College; M.S.W., University of Connecticut; Sociology/Anthropology

*Vincensi, Avis, RT, RDMS, A.S., Holyoke Community College; Sonography

Wakelin, John, A.S.A., Broome Community College; B.A., Binghampton University; Digital Media Production

Wallock, Oliver F., B.A., University of Connecticut; M.S., University of Connecticut; Engineering & Science Transfer

Wanczyk, Janet, A.S., Springfield Technical Community College; B.B.A., University of Massachusetts; M.S., University of Massachusetts; Ed.D., University of Massachusetts; Vice President, Administration/CFO

Warren, Eric L., B.A., San Diego State University; M.L.S., University of Rhode Island; Library Systems Coordinator

Washburn, Barbara, BSEE, Western New England College; MSEE, Tufts University; Electronics Systems Engineering Technology

Weisner, Stephen G., A.A., Rockland Community College; B.A., Richmond College; M.A.T., University of Massachusetts; Ph.D., University of Massachusetts; Sociology

White, Charles W., A.S., Springfield Technical Community College; B.A., School of Visual Arts NY; Graphic Arts Technology

White, Gwendolyn B., B.A., Albertus Magnus College; M.S., Columbia University; English

White, Pamela, B.S., American International College; M.A., American International College; M.B.A., Western New England College; Director, Cooperative Education/Career Services and Transfer Affairs

*Winsper, David, B.A., Vassar College; M.A.T., University of Massachusetts; Developmental English

Woble-Valenski, Margaret, B.S., Russell Sage College; M.A., Central Connecticut State University; P.T.; Physical Therapist Assistant

Wojciechowski, Barbara, A.A., Springfield Technical Community College; B.A., Westfield State College; M.A., American International College; Assistant Coordinator of Financial Aid

Woshinsky, Donna, R.N., BSN, University of Connecticut; MSN, University of Hartford; Nursing

Wurtzel, Barbara S., B.A., State University of New York; M.L.S., State University of New York; Reference Librarian

Yacovone, Vincent, A.A., Holyoke Community College; B.S., University of Massachusetts; M.A., University of Connecticut; C.A.G.S., University of Massachusetts; Director of Instructional Media Production Center

*Zagarins, Juris, B.S., Tufts University; Mat. Eng., Massachusetts Institute of Technology; Engineering and Science Transfer

Zarse, Stephanie, B.S., University of California Davis; B.S.D.H., University of California San Francisco; M.S.D.H., University of Missouri; Dental Hygiene

*Zenor, Jean, B.A., University of Massachusetts; M.Ed., University of Massachusetts; English as a Second Language

*DEPARTMENT CHAIRPERSON/PROGRAM COORDINATOR

Part-time Faculty and Professional Staff

Abbott, Hilton, B.S., University of Vermont; M.S., Eastern Michigan University; Ed.D., University of Massachusetts Amherst; Physics

Aldridge, Angelle, A.S., Springfield Technical Community College; Massage Therapy

Anholt, Marcy, B.S., Wright State University; M.Ed., Arizona State University; Biological Sciences

Arnold, Cynthia, B.A., American University; M.A., New York University; M.A., University of Leicester; Developmental English

Barocas, Jack, B.S., Brooklyn College; M.S., University of Massachusetts; Ph.D., University of Massachusetts; Chemistry

Bennett, Mary, A.B., Mount Holyoke College; Biological Sciences

Benoit, Sharon, A.S., Springfield Technical Community College; B.S., University of Massachusetts; M.S., University of Massachusetts; Computer Information Technology

Booth, Claire, R.N., Mercy Hospital; Medical Assistant

Brahmavar, Saroj S., B.A., Bombay University; M.A., Bombay University; Reference Librarian

Brinkmann, Holly, B.S., Westfield State College; Biological Sciences

Briotta, Susan A., A.S., Springfield Technical Community College; ASCP; Clinical Laboratory Science

Brown, Eric, A.A., Pasadena City Collge; B.A., California State University; M.Ed., Westfield State College; Psychology

Bugbee, E. John, B.A., American International College; M.A., American Interational College; Chemistry

Ciesla, Deborah, B.S., University of Bridgeport; Dental Hygiene

Collamore, Leonard J., B.S.Ed., Westfield State College; M.Ed., Springfield College; Professor Emeritus

Converse, Stephanie, B.A., Mount Holyoke College; certificate, Ohashi Institute; Massage Therapy

Corbeil, Margaret, A.S., Springfield Technical Community College; B.A., Westfield State College; M.Ed., Cambridge College; Visual and Performing Arts

Cressotti-Bugbee, Elsa M., B.A., American International College; M.S.T., American International College; Chemistry

Darcy, Denise, A.S., Springfield Technical Community College; Dental Hygiene

Davis, Jane, B.A. American International College; A.M., Mt. Holyoke College; English

Donohue, Paul, D.M.D., NY University School of Dentistry; Dental Hygiene

Donnelly, Gerard, B.A., Bridgewater State College; Faculty Coordinator, Cooperative Education/Career Services and Transfer Affairs

Dowd, James J. B.S.E., Westfield State College; M.Ed., Westfield State College; Ed.D., University of Massachusetts

Drake, Dennis, B.S., University of Denver; Ph.D., University of Kansas; Chemistry

Duclos, Francis R., B.A., American International College; M.Ed., Westfield State College; Mathematics

Dupont, Kenneth C., B.A., American International College; M.S., Univeristy of Massachusetts; Electronic Systems Engineering Technologies

Dvorchak, Barbara, B.A., Elms College; M.S., Northeastern University; Mathematics

Dykstra, Joy, B.S., Calvin College; M.Ed., Springfield College; Disabilities Services/ Career Counselor

Fioretti, Cynthia, B.S., Springfield College; Computer Information Technologies

Foote, Dorathea L., R.D.H., Forsyth School for Dental Hygienists; A.S., Northeastern University; B.S., University of North Carolina; M.Ed., University of Massachusetts; Dental Hygiene

Gagnon, Jeff, B.S., University of Massachusetts; M.S., University of Massachusetts; M.S., Springfield College; Mathematics

Gibbs, William E., B.A., American International College; M.B.A., Western New England College; Graphic Arts Technology

Gold, Joanne, A.S., Springfield Technical Community College; B.S., University of Massachusetts; Dental Hygiene

Goodwyn, Louise, R.R.T.; Respiratory Care, Baystate Medical Center; B.A., University of Massachusetts; Respiratory Care

Gordon, Jennifer, B.S., SUNY Oneonta; M.S., Georgia Southern University; D.P.E., Springfield College; Mathematics

Grassetti, Sheila, B.A., Smith College; Mathematics

Gregorski, Mitchell, B.B.A., American International College; M.B.A., American International College; Business Administration

Groeneveld, Myrta, B.S., Westfield State College; Mathematics

Hart, Marcine, A.S., Springfield Technical Community College; ASCP; B.S., University of Massachusetts; Clinical Laboratory Science

Herd, William B., A.S., Holyoke Community College; B S. American International College; M.B.A., Western New England College; Business Administration

Howell, Elise, B.S., Ball State University; B.F.A., Ball State University; M.F.A., Virginia Commonwealth University; Art

Humphries, Gina, B.S., Massachusetts School of Pharmacy and Allied Health Sciences; Dental Hygiene

Iannacone, Eric, B.A., University of San Diego; Ph.D., University of Massachusetts; Biological Sciences

Jarmolowicz, Betsy, R.R.T.; B.A., Smith College; Respiratory Care

Jette, Gail E., A.S., Springfield Technical Community College; Mass. Certified Horticulturist; Landscape Design and Management Technology

Kelliher, Michael, D.M.D., Tufts School of Dental Medicine; Dental Hygiene

Khanna, Song, DMD, Tufts School of Dental Medicine, Dental Hygiene

Kiernan-Campbell, Nancy, A.S., Springfield Technical Community College; B.S.,University of Massachusetts; M.P.H., University of Massachusetts; Clinical Laboratory Science

Killian, David, A.S., ARRT(R), Baystate Medical Center, Radiography

Kozlak, Carolyn, B.S., Stonehill College; Clinical Laboratory Science

Kwapien, Carol, R.N., Baystate Medical Center; B.S., St. Joseph's College; Environmental and Occupational Safety Technology

Landis, John, M.D., Chief of Pulmonary Services, Baystate Medical Center, Respiratory Care

Lococo, Kathy, R.R.T.; Respiratory Care, Mercy Hospital; Respiratory Care

Ludwig, Vicky L., B.A., Ithaca College; M.A., Brown University; M.L.S., Simmons College; Reference Librarian

Margolis, Maureen, DMD, Tufts School of Dental Medicine, Dental Hygiene

Martinez, Nitza, B.A., University of Massachusetts; certification in foreign language/ Spanish K-12; J.D., Western New England College School of Law; Title III Academic Counselor

Mathison, Carol, L.M.H.C., B.S., Russell Sage; M.S., Springfield College; Counselor/Generalist

Mavrelion, Cleo Stavarakis, B.A., American International College; M.S., Springfield College; Foreign Languages

McDonald, James A., B.S., University of Massachusetts; M.S., American International College; Mathematics

McGinnis-Cavanaugh, Beth, A.S., Springfield Technical Community College; B.S.C.E., University of Massachusetts; Physics

Mish, Judith E., B.S.B.A., University of Minnesota; M.A., University of Minnesota; Developmental English

Mullett, William S., B.A., American International College; M.Ed., University of Massachusetts; Physics

Nadeau, Kathleen, A.S., Springfield Technical Community College; Dental Hygiene

Nash, Michele, B.S., University of Massachusetts; Biological Sciences

Nichols, Roberta R., B.S., University of Connecticut; M.A.T., University of Hartford; Ph.D., University of Massachusetts; Biological Sciences

Norbis, Mario, B.A., Central University of Venezuela, M.A., University of Massachusetts; Ph.D., University of Massachusetts; Foreign Languages

Parshall, Elaine, Ph.D. Tufts University; Physics

Patterson, Kenneth, A.A., American International College; B.A., American International College; M.Ed., Cambridge College; Ph.D., Lacrosse University; Mathematics

Peck, Allan, B.S.E.D, Westfield State College; M.A., Rutgers University; Computer Information Technology

Polga, Kit, B.A., Smith College, M.A., University of Kent; English

Pringle, Larry, A.S., Adirondack Community College; B.S, Castleton State College; M.Ed., Westfield State College; M.N.S., Worcester Polytechnic Institute; Chemistry

Quinn, Joan, Mass. Board of Cosmetology Certified Instructor; Cosmetology

Ramah, James, B.A., American International College; Mathematics

Randall, Linda B., A.A., Springfield Technical Community College; M.Ed., University of Massachusetts; Sociology

Reine, Samar L., B.S., Florida Metropolitan University; M.B.A., American International College; Economics

Rice, Nan E., A.A., Springfield Technical Community College; B.A., Westfield State College; M.S., Westfield State College; Social Sciences (sabbatical leave 2005-2006)

Ridge-Girolamo, David-James, B.A., Westfield State College; M.Ed., Springfield College; Admissions/Financial Aid Counselor

Roberts, Donald, B.S.Ed., Westfield State College; M.Ed., Westfield State College; Mathematics

Robbins, Kenneth, DDS, University of Pennsylvania; Dental Hygiene

Root, Stephen, D.M.D., Temple University School of Dentistry;Dental Hygiene

Ryan, Karolyn, B.S.N., University of Massachusetts; Medical Assistant

Ryan, Lucy, R.N., Mercy Hospital; Medical Assistant

Sawtelle, Kathleen, Certified Surgical Technologist, Surgical Technology

Scully, Suzanne, A.S., Asnuntuck Community College; A.A., Springfield Technical Community College; A.S., Springfield Technical Community College; B.F.A., University of Massachusetts; Graphic Arts Technology

Seligman, Richard, B.A., R.Ph., Massachusetts College of Pharmacy and Allied Health Sciences; Respiratory Care

Shea, Dr. John E., Psychological Consultant, Counseling Center

Skelton, Russell R., B.A., History, University of Massachusetts; B.S., University of Massachusetts; Computer Information Technologies

Slayton, Maureen, A.S., Springfield Technical Community College; B.S, Springfield College; Massage Therapy

Smith, Thomas P., A.S., Springfield Technical Community College; B.S., University of Massachusetts; Landscape Design and Management Technology

Spies, Wayne, B.B.A., Iowa State University; M.B.A., Yale University; Computer Information Technologies

St. Amant, Julie, R.R.T., B.A., Central Connecticut State University; Respiratory Care

Stewart, Janiece R., B.S., Brooklyn College; M.Ed., University of Massachusetts; Sociology

Szlajen, Beatrice, A.A., Havana Business College; M.Ed., University of Massachusetts; Director of Bilingual Services

Tombs-Harling, Karen, B.A., Smith College; M.S., University of Massachusetts; Biological Sciences

Totoe-Boakye, Harriet, M.S., Wright State University; M.S., University of Massachusetts; Ph.D., University of Massachusetts; Chemistry

Tuber, Joan, R.N., Surgical Technology

Vassos, George, D.M.D., Tufts Dental School; Harvard University VA Program; Dental Hygiene

Verville, Richard F., B.B.A., Western New England College; M.B.A., Western New England College; Cert., Harvard Business School; Business Administration

Walter, L. Douglas, B.S.B.A., Western New England College; Computer Information Technology

Walch, Erica, B.A., University of Massachusetts; M.Ed., Elms College; Special Academic Projects

Walz, Joseph, A.S., Springfield Technical Community College; D.M.D., University of Connecticut; Dental Hygiene

White, William, B.S., University of Connecticut; M.S., Rennselaer Polytechnic Institute; Engineering Sciences

Whittaker, Laurie, A.S., ARRT(R), Baystate Medical Center, Radiography

Wilson, Rodney, B.S., Southeast Missouri State College; M.A., University of Massachusetts; Coordinator, Adult Basic Education

Wilson, Teresa, B.A., Alliance College; M.A., American International College; M.Ed., American International College; Adult Basic Education Counselor

Wyzik, Susan, A.A., Springfield Technical Community College; B.A., Mt. Holyoke College; History

Yando, Raymond, B.S., University of Massachusetts; M.S., Worcester Polytechnic Institute; Mathematics

Clinical Faculty-Health Sciences

CLINICAL LABORATORY SCIENCE

Cote, Michelle, B.S., MT(ASCP); Lab Manager, Hampden County Physicians

Ely, Joseph, M.T., (ASCP), B.A., Administrative Director of the Laboratory, Noble Hospital

Faust, Marilyn, MLT(ASCP); Lab Supervisor, Johnson Memorial Hospital

Hassiotis, Peter, B.S., M.T. (ASCP), M.B.A.; Microbiology, Baystate Medical Center

Lakoma, Dorothy, M.T., (ASCP), S.C., QA Manager, Life Laboratories

Murley-Kells, Karen, B.S., M.T. (ASCP), M.B.A., Advanced Technologist (Microbiology) Baystate Medical Center

Patten, William, M.T.(ASCP), MHS, Service Coordinator, Baystate Reference Lab

St. Jean, Pamela, M.T., (ASCP), M.A., Lab Manager, Cooley Dickinson Hospital

Savard, Richard, B.S., MT(ASCP); Lab Manager, Wing Memorial Hospital

Sickler, Sherry, M.T., (ASCP), B.S., Supervisor, Laboratory Service, Veterans Administration Medical Center

Sirorska, Krystyna, M.D., Clinical Pathologist, Life Laboratories, Mercy Medical Center; Medical Advisor to CLS programs

DENTAL ASSISTANT

Bucalo, Donald, D.D.S., Clinical Professor

Bucalo, Lynn, D.D.S., Clinical Professor

Cabral, Ema, D.D.S., Clinical Professor

Coughlin, Kevin, D.D.S., Clinical Professor

Frontera, Yolande, D.D.S., Clinical Professor

Leff, Robert, D.M.D., Clinical Professor

Levanos, Constantinos, D.M.D., Clinical Professor

Maslowski, James, D.M.D., Clinical Professor

Megas, John Jr., D.M.D., Clinical Professor

Pahl, Ronald, D.D.S., Clinical Professor

Quinn, Maureen, D.D.S., Clinical Professor

Quinn, Robert, D.D.S., Clinical Professor

Rappaport, Robert, D.D.S., Clinical Professor

Reen, David, D.M.D., Clinical Professor

Reen, Thomas, D.M.D, Clinical Professor

Sheehan, Robert, D.D.S., Clinical Professor

Torchia, John, D.D.S., Clinical Professor

Trecker, Jonathan, D.D.S., Clinical Professor

Trombly, Kevin, D.D.S., Clinical Professor

Welch, Paul, D.M.D., Clinical Professor

White, Richard, D.D.S., Clinical Professor

Winn, Gerard, D.D.S., Clinical Professor

DIAGNOSTIC MEDICAL IMAGING - SONOGRAPHY

Bagge, Paula, RDMS, Staff Sonographer, Sonography Associates, Clinical Instructor

Brault, Kim, RDMS, Manager, OB/GYN Ultrasound Department, St. Francis Hospital and Medical Center, Clinical Instructor

DelCampo, April, RDMS, Staff Sonographer, Antenatal TestingUnit, Baystate Medical Center, Clinical Instructor

Hampf, Frederick E., Jr., M.D., Director of Ultrasound Services, Baystate Medical Center, Medical Director

Kern-Warnock, Christine, RDMS, Manager, Sonography Department, Amherst Medical Center-Valley Medical Group, Clinical Instructor and Clinical Coordinator

O'Connor, Mary, RDMS, Staff Sonographer, Holyoke Hospital, Clinical Instructor

Royer, Denise, RDMS, Manager, Harford Hospital Prenatal, Clinical Instructor

Turgeon, Michelle, RDMS, Ultrasound Supervisor, Mercy Medical Center, Clinical Instructor

Vasquez, Juan E., RDMS, Staff Sonographer, Radiology Services/Ultrasound, Baystate Medical Center, Clinical instructor

Ward, Kim, RDMS, Ultrasound Supervisor, Fairview Hospital, Clinical Instructor

MEDICAL ASSISTANT

Adamczyk, Denise, RiverBend, Chicopee

Anderson, Bonnie, Wing Memorial Hospital, Ludlow and Monson

Appleton, Sally, Ludlow Medical Associates

Barone, Susan, Hampden County Physicians Associates, Springfield

Beaudet, Karen, RiverBend, Springfield

Bhagat, Smitra, M.D., Enfield

Boronak, Debra, Paul Farkas, MD, Springfield

Brown, Judy, Wing Memorial Hospital, Palmer

Camus, John, Hampden County Physicians Associates, Springfield

Cintron, Cindy, Valley Pulmonary Associates, Springfield

Despres, Connie,Greenfield Pediatric Associates,Quaboag Gastroenterology Group, Franklin Medical Group, Northern Edge Medical Associates, BAPO

Duda, Maureen, ECG, Holyoke Medical Center

Dutton, Kathy, OP/Med Surg, Mercy Medical Center

Fogg, Lynn, South Hadley Medical Associates, BAPO

Francis, Darlene, Enfield Medical Associates

Gallant, Pat, Family Care Medical Center, Springfield

Geranova, Gail, Human Resources, Wing Memorial/Palmer Medical Center

Giles, Marie, Northern Edge Medical Associates BAPO

Horton, Lorri, Belchertown Medical Associates, Mary Lane OB/GYN, BAPO

Ingals, Christine, BSMC Neighborhood

Jackson, Rebecca, Valley Medical Associates, Springfield

Jankowski, Carole, Meadows Medical Associates, West Side Medical Associates, BAPO

Kelliher, Nancy, Hampden County Physicians Associates, West Springfield

Kelly, Diane, Deerfield Medical Associates, Pioneer Women's Health, BAPO
Kirouac, Michele, Pioneer Valley Family Practice, BAPO
Krystofik, Ron, ECG, Wing Memorial/Palmer Medical Center
Lamagdelinie, Mary, Ear Nose Throat Associates, Springfield
Lavigne, Jim, BSMC Neighborhood, BSMC Urgent Care, Springfield
Lesiewski, Jean, Dr. Paul Taylor, Westfield
Massimino, Amy, Springfield Medical Associates
Mateus, Mary, Life Labs, Mercy Medical Center
Maupin, Don, Mary Lane Medical Associates, Mary Lane Pediatric Associates, BAPO
Maynard, Ann, Baystate Medical Center ED
Morgan, Rob, BSMC Wesson Women's
Moriarty, Ellen, BSMC Medical Facilities, Springfield
Myers, Barbara, RiverBend, Agawam
Philbert, Pat, Holyoke Medical Center Work Connection
Patterson, Robin, HCPA Urgent Care
Poutre, Joan, Holyoke Medical Center Lab
Rennell, Mary Ellen, Western Mass Medical Group, Springfield
Rice, Cara, RiverBend, Agawam
Rivera, Sonia, MSMC Brightwood, Springfield
Roberts, Paige, Sumner Pediatrics, Springfield
Schermahorn, Joan,RiverBend, Westfield
Sirois, Renee, Hampden County Physicians Associates
Stakowski, Elisa, RiverBend, Agawam
Sydarak, Cheryl, BSMC Internal Medicine, Springfield
Tailey, Carolyn, M.D., Holyoke
Thoma, Vicky, Ludlow Medical Associates, Boston Road Medical Associates, BAPO
Trusz, Judith, Wing Memorial/Wilbraham Medical Center
Wurst, Dahlia, Dr. Leone, Wilbraham
Yelinek, Linda, BSMC Pediatrics, Internal Medicine
Zalewski, Audry, Holyoke Medical Center Lab

NUCLEAR MEDICINE

Bryda, Victoria, A.S., CNMT, Clinical Coordinator, Clinical Nuclear Medicine, Hartford Hospital
Cowher, Jessica, A.S., CNMT, Clinical Coordinator, Clinical Nuclear Medicine, Manchester Memorial Hospital
Dentsman, Edward, M.D., Chief, Nuclear Medicine, Manchester Memorial Hospital
Gianturco, Laurie, M.D., Medical Director - Baystate Medical Center, Program Medical Director
Heller, Gary V., M.D., Medical Director, Nuclear Cardiology, Hartford Hospital

Masse, Michele, B.S., CNMT, Clinical Coordinator, Nuclear Cardiology, Hartford Hospital

Quackenbush, Brad, A.S., CNMT, Clinical Coordinator, Mercy Medical Center

Rosenberg, Ronald J., M.D., Associate Medical Director, Clinical Nuclear Medicine, Hartford Hospital

St. Jacques, Jayson, M.D., Medical Director - Nuclear Medicine, Mercy Medical Center

Tanner, Michael, B.S., CNMT, Clinical Coordinator, Nuclear Medicine, Baystate Medical Center

OCCUPATIONAL THERAPY ASSISTANT

Aube, Steve, OTR/L, Clinical Staff, Holyke Hospital

Bernadino, Celeste, COTA/L, Therapeutic Staff, Chicopee School System

Bourgue, Leslie, OTR/L, Therapeutic Staff, Tantasqua Regional School District

Browning, Evelyn, COTA/L, Clinical Staff, Spaulding Rehabilitation Hospital

Calcano, Grace, OTR/L, Clinical Staff, Baystate Medical Center

Charest, Elaine, OTR/L, M.S., M.B.A., Manager of Rehabilitation Services, Shriners Hospital

Duga, Andrea, COTA/L, Clinical Staff, Sunbridge of Hadley

Eastwood-Lin, Anne, OTR, Clinical Manager, Berkshire Health Systems

Fluery, Michelle, COTA/L, Therapeutic Staff, Hampshire Educational Collaborative

Frann, Kari, COTA/L, Clinical Staff, Heritage Hall Nursing and Rehabilitation

Gaylord, Heide. COTA/L. Clinical Staff, Noble Hospital

Gray, Bonnie, COTA/L, Clinical Staff, Hartford Hospital

Howell, Mary, COTA/L, Wilbraham-Hampden Regional School District

Jacobs, Mary Lynn, OTR/L, Private Practitioner

LaBelle, Jill, OTR/L, Clinical Supervisor, Sisters of Providence Health Systems

Latore, Debra, OTR/L, Clinical Staff, Shriners Hospital

McIntyre, Charlotte, COTA/L, Therapeutic Staff, East Longmeadow School System

Maciorowski, Chester, COTA/L, Clinical Staff, Chestnut Hill Nursing and Rehabilitation

Manniello, Kristina, OTR/L, Private Practitioner

May, Sally, COTA/L, Clinical Staff, Kimberly Hall Nursing and Rehabilitation

Mazick, Theresa, OTR/L, Therapeutic Staff, Belchertown School System

McCarthy, Kelly, OTR/L, Occupational Therapy Manager, Berkshire Medical Center

Morris, Lauren, OTR/L, Clinical Staff, Saint Mary's Home

Munningham, Keith, COTA/L, Clinical Staff, Health South Rehabilitation Hospital

Murray, Cathy, OTR/L, Therapeutic Staff, Gateway Regional School District

Parker, Michelle, OTR/L, Clinical Staff/Student Coord., Baystate Health Systems

Prescott, Laurel, OTR/L, Therapeutic Staff, Palmer School System

Rolindini, Isabella, COTA/L, Clinical Staff, Health South Rehabilitation Hospital

Simmons, Joan, Ed.D.,M.S., OTR/L, Faculty, Springfield College

Slcarya, Kathleen, OTR/L, Clinical Staff, Sisters of Providence Health System

Sullivan, Laurie, COTA/L, Clinical Staff, Western Massachusetts Hospital

Swiconek, Carol, COTA/L, Service Coordinator, Springfield Infant Toddler Services
Thompson, Lisette, COTA/L, Clinical Staff, Chapin Center for Rehabilitation
Wallace, Nan, COTA/L Clinical Staff, Baystate Health Systems
Woytowicz, Diane, COTA/L, Therapeutic Staff, Lower Pioneer Valley Educational Collaborative
Yoffa, Joyce, OTR/L Clinical Staff, Baystate Medical Center
Zobel-Lachiusa, Jeanne, M.S., OTR/L, Private Practitioner

PHYSICAL THERAPIST ASSISTANT PROGRAM

Blank, Mitchell, P.T., Woodlake at Tolland
Christenson, Madelyn, P.T.A., Sunbridge of Hadley
Collins, Kim, P.T.A., Hospital for Special Care
Crowley, Maureen, P.T.A., Health South Rehab Hospital at Ludlow
Densmore, Nancy, P.T.A., Health South Rehab Hospital at Ludlow
Druin, Mark, P.T.A., Motor Vehicle Accident Center
Emery, Kelley, P.T.A., New England Orthopedic Surgeons, PT Services
Ferrous, Jeff, P.T.A., Mercy Medical Center, Weldon Center
Golden, Joanne, P.T.A., New England Orthopedic Surgeons, PT Services
Higgins, Paul, P.T., Health South
Hogan, Bill, P.T., Eastern Rehabilitation Network
LeClair, Katie, P.T.A., Mercy Medical Center - Weldon Center
LoPriore, Julie, P.T.A., Mercy Medical Center - Weldon Center
Ludwin, Lauren, P.T.A., Shriners Hospital
Major, Terri, P.T.A., Cooley Dickinson Hospital, PT Associates
McAvoy, Susan, P.T.A., Mercy Medical Center - Weldon Center
McDonough, Jody, P.T.A., Wing Memorial Hospital
McEvitt, Meghan, P.T., Kindred Healthcare
Melvin, Tom, P.T.A., Baystate Medical Center, Outpatient Rehab
Murray, Marilyn, P.T.A., LifeCare Center of Wilbraham
Parelli, Diane, P.T.A., Baystate Medical Center
Pronowicz, Nicole, P.T.A., Springfield Public Schools
Radon, Matt, P.T.A., Physical Therapy Partners
Rinaldi, Jean, P.T.A., Eastern Connecticut Health Network, Outpatient
Ruscio, Nancy, P.T.A., Shriners Hospital
Russi, Michelle, P.T.A., Rehabilitation Hospital of Connecticut
Schindler, Cheryl, P.T.A., Noble Hospital - Bronson Rehab
Sirois, Louise, P.T.A., Mercy Medical Center - Weldon Center
Smith, Vern, P.T.A., Pioneer Spine and Sports
Wholley, Mary, P.T.A., Northampton Nursing Home
Worden, Betsy, P.T.A., Sunbridge of Hadley
Vincek, Sue, P.T.A., Rockville General Hospital

RADIOGRAPHY

Alvaro, Doreen, A.S., RTR, Department Head, Radiology, Shriners Hospital for Children

Chariut, Michelle, RT(R), Clinical Instructor, Baystate Medical Center

DePasquale, Anthony, RT(R), Radiology Operations Manager, Berkshire Medical Center

Killian, Dave, RT(R), Clinical Instructor, Baystate Medical Center

Kirby, Betty, RN, Education Coordinator, Berkshire Medical Center

Kirkwood, Robert, M.D., F.A.C.R., Medical Director, Baystate Medical Center, Clinical Professor

Parker, Thomas, M.D., Residency Education Director, Baystate Medical Center

Quillen, Christine, RT(R), Clinical Instructor, Berkshire Medical Center

Rzewniski, Theresa H., RT(R), Clinical Instructor, Shriners Hospital

RESPIRATORY CARE

Chassion, Cheryl, R.R.T., Director, Respiratory Care, Mercy Hospital, Clinical Instructor

Coppola, Michael, M.D.; Pulmonary Specialist, Springfield Medical Associates; Clinical Professor

Karras, George, M.D., Medical Director, Respiratory Care, Mercy Hospital, Clinical Instructor

Langone, Columba, R.R.T., Director, Respiratory Care, Baystate Medical Center

Meth, Bruce, M.D., Medical Director, Respiratory Care Program, Springfield Technical Community College, Pulmonary Specialist, Clinical Professor

Stillerman, Roy, M.D., Springfield Medical Associates, Pulmonary Specialist, Clinical Professor

SURGICAL TECHNOLOGY

Avezzie, Laurene, Nurse Educator, Mercy Medical Center

Berryman, Antoinette, CST, Mercy Medical Center

Canegallo, Janice, Clinical Nurse Specialist, Department of Surgery, Baystate Medical Center

Donati, Julie, CST, Mercy Medical Center

Fuller, Deborah, R.N., Surgical Services Clinical Director, Baystate Medical Center

Garrity, Linda, Clinical Director Surgical Services, Mercy Medical Center

Gaspard, Ken, R.N., OR Director, Franklin Medical Center

Girard, Fran, CST, Director of Materials Management, Mercy Medical Center

McIntyre, Toni, R.N., Nursing Coordinator, Cataract & Laser Center West

McKenna, Dorothy, R.N., Clinical Director, Baystate Medical Center

Phillips, Margaret, OR Educator, Franklin Medical Center

Roux, Lisa, OR Director, Cooley Dickinson Hospital

Index of Course Numbers

ACCT-110 Accounting 1 242
ACCT-113 Accounting/Financial 242
ACCT-210 Accounting 2 242
ACCT-213 Accounting/Managerial 242
ACCT-310 Intermediate Accounting 1 243
ACCT-311 Cost Accounting 243
ACCT-312 Managerial Accounting 243
ACCT-313 Intro. to Federal Income Taxes 243
ACCT-316 Computerized Accounting 243
ACCT-410 Intermediate Accounting 2 243
ALGB-081 Elementary Algebra 1 341
ALGB-082 Introductory Algebra 1 341
ALGB-083 Introductory Algebra 1 341
ALGB-084 Algebra 1 Elemental Bilingüe 340
ALGB-087 Lecture Algebra 1 340
ALGB-091 Elementary Algebra 2 342
ALGB-092 Elementary Algebra 2 342
ALGB-093 Elementary Algebra 2 342
ALGB-094 Algebra 2 Elemental Bilingue 340
ALGB-097 Lecture Elementary Algebra 2 341
ALGB-099/MATH-100 Elements of Math 341
ARTH-071 Pre-Algebra 341
ARTH-072 Pre-Algebra 341
ARTH-073 Pre-Algebra 341
ARTH-074 Pre-Algebra Bilingüe 340
ARTH-078 Lecture Pre-Algebra 340
ARTS-115 Computing In the Arts 300
ARTS-140 Art History: Prehistoric to Gothic 300
ARTS-142 Painting 1 300
ARTS-143 Printmaking 1 300
ARTS-145 Figure Drawing 301
ARTS-146 Design: Introduction to Art 301
ARTS-147 Basic Drawing 301
ARTS-149 Drawing Composition 301
ARTS-150 Introduction to Photography 301
ARTS-152 Photography 2 301
ARTS-160 Digital Workshop 301
ARTS-215 Digital Arts 302
ARTS-240 Art History: Renaissance and Baroque 302
ARTS-242 Painting 2 302
ARTS-243 Printmaking 2 302
ARTS-246 Basic Design 2 302
ARTS-315 3D Design 302
ARTS-346 History of Modern Art 302
ARTS-360 Experimental Computer Imaging 1 303
ARTS-460 Experimental Computer Imaging 2 303
ARTS-902; ARTS-903; ARTS-905 Directed Study in Art 303
ATHL-101 Rape Aggression Defense for Women 331
ATHL-102 Physical Aggression Defense 331
ATHL-150 Yoga for Health 331
ATHL-201 Advanced Rape Aggression for Women 332
AUTO-112 Electrical Systems 235
AUTO-115 Brake Systems 235

AUTO-210 Gasoline Engine Service 235
AUTO-212 Automotive Electronic Systems 235
AUTO-240 Climate Control 235
AUTO-250 Diesel Engine Operations 236
AUTO-340 Steering and Suspensions 236
AUTO-350 Transmission and Transaxle 1 236
AUTO-440 Advanced Control Systems 236
AUTO-450 Transmission and Transaxle 2 236
BIOL-090 Basic Biological Science 237
BIOL-100 Natural Science for Early Childhood Education 237
BIOL-102 Principles of Biology 1 237
BIOL-104 Human Biology 1 237
BIOL-106 Biology 1 237
BIOL-108 General Botany 237
BIOL-109 Biology of Man 1 237
BIOL-113 Fundamentals of Environmental Biology 238
BIOL-121 Microbiology 238
BIOL-128 Exploration of Science Teaching 238
BIOL-132 Anatomy & Physiology 1 238
BIOL-136 Applied Physiology 238
BIOL-140 Biochemistry 238
BIOL-142 Nutrition 238
BIOL-143 Fundamentals of Anatomy & Physiology 1 238
BIOL-146 Essentials of Human Biology 1 239
BIOL-148 Basics of Anatomy and Physiology 239
BIOL-202 Principles of Biology 2 239
BIOL-204 Human Biology 2 239
BIOL-206 Biology 2 239
BIOL-209 Biology of Man 2 239
BIOL-220 Contemporary Human Biology 239
BIOL-232 Anatomy & Physiology 2 240
BIOL-243 Fundamentals of Anatomy & Physiology 2 240
BIOL-320 Histology 240
BIOL-340 Sectional Anatomy 240
BIOL-350 Embryology 240
BIOL-351 Cell Biology 240
BIOL-360 Genetics 240
BIOL-900 Directed Study in the Biological Sciences 241
BIOT-151 Introduction to Biotechnology 241
BIOT-197 Cooperative Education in Biotechnology 241
BIOT-210 Quality Control for Biotechnology Manufacturing 241
BIOT-251 Biotechnology 241
BLAW-310 Business Law 1 245
BLAW-311 Basic Legal Concepts 245
BLAW-312 Legal Environment of Business 245
BLAW-410 Business Law 2 245
BMDL-120 Introduction to Biomed. 242
BSTS-143 Business Statistics 244
BUSN-101 Office Accounting 1 244
BUSN-106 Medical Assistant Recordkeeping 244
BUSN-330 Supervisory Management 247
BUSN-335 Leadership 248
CHEM-101 Survey of Chemistry 1 250
CHEM-103 General Chemistry 1 250
CHEM-203 General Chemistry 2 250
CHEM-320 Organic Chemistry 1 250
CHEM-355 Instrumentation for Clinical Laboratory Science 250

CHEM-370	Independent Chemistry Study 1	250
CHEM-420	Organic Chemistry 2	250
CHEM-470	Independent Chemistry Study 2	251
CHLD-140	School-Age Care and the NSACA	277
CHLD-251	Inviting Young Children into the World of Books	277
CHLD-340	Strategies for Communicating with Families	278
CIVL-115	Construction Materials and Methods	251
CIVL-120	Architectural Design	251
CIVL-125	Architectural CAD 1	251
CIVL-220	Construction Estimating	251
CIVL-225	Architectural CAD 2	252
CIVL-235	Hydraulics and Hydrology	252
CIVL-310	Surveying 1	252
CIVL-325	Soils & Foundations	252
CIVL-345	Statics and Strength of Materials	252
CIVL-410	Reinforced Concrete Analysis	252
CIVL-420	Construction Management	252
CIVL-430	Transportation Engineering	253
CIVL-446	Structures	253
CIVL-451	Architectural Studio	253
CIVL-460	Project Scheduling	253
CIVL-470	Geographic Information Systems	253
CLER-204	Intro. to Machine Transcription	324
CLLS-101	Introduction to the Clinical Lab	254
CLLS-103	Medical Laboratory Safety	254
CLLS-140	Clinical Laboratory Assistant Skills 1	254
CLLS-141	Clinical Laboratory Assistant Skills 2	254
CLLS-150	Clinical Experience 1	254
CLLS-155	Clinical Experience 2	254
CLLS-180	Principles and Practice of Phlebortomy	255
CLLS-212	Medical Microbiology 1	255
CLLS-300	Hematology and Coagulation	255
CLLS-302	Clinical Chemistry	255
CLLS-311	Medical Microbiology 2	255
CLLS-315	Immunohematology	255
CLLS-409	Laboratory Skills in Nuclear Medicine	255
CLLS-412	Immunology	256
CLLS-420	Clinical Practicum 1	256
CLLS-421	Clinical Practicum 2	256
CLLS-422	Clinical Practicum 3	256
CLLS-440	Clinical Laboratory Seminar	256
CLLS-450-451	Clinical Lab Practicum 4	256
CMPA-098	Introduction to Computers	315
CMPA-100	Computers, Windows and Email	313
CMPA-101	Introduction to Word Processing	313
CMPA-102	Word Processing	313
CMPA-103	Microcomputer Applications for Windows	315
CMPA-105	Introduction to Excel	313
CMPA-107	Introduction to Quickbooks	313
CMPA-109	Excel	313
CMPA-110	Introduction to Access	314
CMPA-111	Access	314
CMPA-115	Introduction to the Internet	314
CMPA-116	Data Entry Keyboarding	314
CMPA-120	Introduction to PowerPoint	314
CMPA-121	Powerpoint Applications	314
CMPA-125	Introduction to Integration	314

CMPA-196	Computer Concepts for the Arts and Sciences	316
CMPA-197	Technology in Education	316
CMPA-201	Microcomputer Applications 2	317
CMPA-202	Advanced Word Processing	317
CMPA-210	Computer-Mediated Communication for the Global Village	317
CMPA-240	Excel/Access Applications	318
CMPA-320	Desktop Publishing	319
COSM-120	Cosmetology Skills 1	263
COSM-121	Cosmetology Lab 1	263
COSM-122	Aesthetics 1	263
COSM-123	Aesthetics Lab 1	263
COSM-220	Cosmetology Skills 2	263
COSM-221	Cosmetology Lab 2	263
COSM-222	Aesthetics 2	264
COSM-223	Aesthetics Lab 2	264
CSCI-100	Introduction to Computer Science	257
CSCI-110	Computer Science 1	257
CSCI-111	Intro. to the Java Programming Language	257
CSCI-210	Computer Science 2	258
CSCI-211	Intermediate Topics in Java Programming	258
CSCI-310	Machine and Assembly Language	258
CSCI-321	Computer Organization and Digital Logic	258
CSCI-401	Data Structures and Algorithms	258
CSCI-420	Programming in Java	258
CSCO-170	Cisco Networking 1	259
CSCO-270	Cisco Networking 2	260
CSCO-370	Cisco Networking 3 & 4	261
CSET-101	Basic Computer Maintenance	259
CSET-111	Introduction to Programming	259
CSET-210	Introduction to Computer Systems	259
CSET-242	Computer Programming	260
CSET-310	Microcontroller Theory	260
CSET-333	Machine and Assembly Language Programming	260
CSET-343	Linear Circuits	260
CSET-344	Computer Programming	260
CSET-345	Operating Systems 1	261
CSET-360	Computer Networking 1	261
CSET-420	MicroprocessorTheory	261
CSET-440	Microprocessor Interfacing	261
CSET-441	Embedded Controllers	262
CSET-445	Operating Systems 2	262
CSET-451	Computer Peripherals	262
CSET-452	Computer Systems	262
CSET-460	Advanced Computer Networking	262
DAST-100	Dental Assisting Techniques 1	264
DAST-102	Oral Anatomy	264
DAST-103	Dental Radiology 1	264
DAST-105	Dental Sciences 1	265
DAST-106	Dental Materials 1	265
DAST-200	Dental Assisting Techniques 2	265
DAST-201	Dental Sciences 2	265
DAST-202	Dental Records	265
DAST-203	Dental Radiology 2	266
DAST-204	Clinical Affiliation	266
DHYG-101	Clinical Practice 1	266
DHYG-103	Oral Anatomy 1	266
DHYG-104	Dental Radiology	266

DHYG-200 Nutrition and Oral Health 266
DHYG-201 Oral Pathology 266
DHYG-202 Clinical Practice 2 267
DHYG-203 Oral Anatomy 2 267
DHYG-300 Periodontology 267
DHYG-301 Dental Materials 267
DHYG-302 Pharmacology 267
DHYG-303 Clinical Practice 3 267
DHYG-400 Community Dental Health 267
DHYG-401 Clinical Practice 4 268
DHYG-402 Applied Dental Auxiliary Skills 268
DMDS-100 Sonographic Physics and Instrumentation 1 272
DMDS-200 Sonographic Physics and Instrumentation 2 273
DMDS-202 Sonographic Procedures 1 273
DMDS-203 Clinical Practicum 1 273
DMDS-300 Sonographic Procedures 2 273
DMDS-301 Clinical Practicum 2 273
DMDS-310 Seminars in Medical Imaging 273
DMDS-400 Sonographic Procedures 3 273
DMDS-401 Clinical Practicum 3 273
DMDS-402 Sonographic Procedures 4 273
DMDS-403 Clinical Practicum 4 274
DRDG-091 Reading Level 1 294
DRDG-092 Reading Level 2 295
DWRT-099 Review for College Writing 295
ECNV-082 Basic Skills in Conversation Level 1 292
ECNV-085 Basic Skills in Conversation Level 2 293
ECON-100 Principles of Economics 1 365
ECON-200 Principles of Economics 2 365
ECON-300 Current Economic Problems 365
ECON-320 Development Economics Seminar 365
EDUC-320 Foundations of Education: Urban Perspectives 339
EESL-080 English as a Second Language Level 1 292
EESL-083 English as a Second Language Level 2 292
EESL-086 English as a Second Language Level 3 293
EESL-094 English as a Second Language Level 4 294
ELEC-110 Basic Electricity 1 278
ELEC-121 CAD for Automation 278
ELEC-140 Basic Programming for Microcomputers 278
ELEC-210 Basic Electricity 2 279
ELEC-241 Fundamentals of Motor Control 279
ELEC-260 Fluid Power Technology 279
ELEC-320 Industrial Electronics 1 279
ELEC-331 Control System Theory 1 279
ELEC-340 Fundamentals of Robotics 279
ELEC-350 Programmable Motor Control 279
ELEC-411 Industrial Electronics 2 280
ELEC-431 Control System Theory 2 280
ELEC-441 Senior Projects 280
ELEC-451 Microprocessor Applications 280
ELEC-480 Robotics and Automated Systems 280
ENGL-100 English Composition 1 295
ENGL-101 College English 2 295
ENGL-110 Honors English Composition 1 295
ENGL-200 English Composition 2: An Introduction to Literature 296
ENGL-201 Business English 296
ENGL-210 Honors English Composition 2 296

ENGL-300 Literature of the Western World: BC to 17th Century 296
ENGL-301 English Literature: Anglo-Saxon to Neoclassical Periods 297
ENGL-302 American Literature: 1620-1860 297
ENGL-304 Introduction to African-American Literature 1 297
ENGL-305 Children's Literature 297
ENGL-308 Women in Literature 297
ENGL-321 Introduction to Creative Writing: Poetry 297
ENGL-329 Latino Writers in the U.S. 298
ENGL-345 The American and European Short Story 298
ENGL-351 Non-Western Literary Voices 298
ENGL-400 Literature of the Western World: 18th to 20th Centuries 298
ENGL-401 English Literature 2: Romanticism to Modernism 298
ENGL-402 American Literature: 1860-Present 299
ENGL-404 Intro. to African-American Literature 2 299
ENGL-408 Women in Literature 2 299
ENGL-421 Introduction to Creative Writing: Fiction 299
ENGL-900 Directed Study in English 299
ENGR-100 Special Projects in Engineering 1 288
ENGR-101 Special Projects in Engineering Technology 1 288
ENGR-102 Special Projects in Engineering Technology 2 288
ENGR-106 Introduction to Computer-Aided Drafting 288
ENGR-109 Introduction to Engineering Graphics 288
ENGR-200 Special Projects in Engineering 2 289
ENGR-203 Computer Applications in Engineering 289
ENGR-303 Introduction to Mechanical Design 289
ENGR-310 Mechanics 1 (Statics) 289
ENGR-320 Circuit Analysis 1 289
ENGR-324 Electrical Engineering Lab 1 289
ENGR-330 Introduction to Materials Science and Engineering 290
ENGR-335 Mechanics of Materials 290
ENGR-340 Introduction to Chemical Engineering 290
ENGR-350 Engineering Thermodynamics 1 290
ENGR-351 Engineering Thermodynamic Computational Lab 290
ENGR-410 Mechanics 2 (Dynamics) 290
ENGR-411 Probability and Statistics for Engineers 290
ENGR-420 Circuit Analysis 2 291
ENGR-421 Engineering Measurements and Analysis 291
ENGR-423 Active Networks 291
ENGR-427 Electrical Engineering Lab 2 291
ENGR-440 Chemical Engineering Thermodynamics 1 291
ENGR-482 Introduction to Embedded Microcontrollers 291
ENGY-110 Theory of Controls 286
ENGY-120 Energy Systems Lab 1 286
ENGY-132 Engineering Graphics 331 286
ENGY-220 Combustion Control Circuits 286
ENGY-230 Energy Systems Lab 2 286
ENGY-240 Principles of Refrigeration 286
ENGY-320 Heating System Design 287
ENGY-330 Power Plant Operation 1 287
ENGY-340 Fundamentals of Air Conditioning 287
ENGY-350 Microprocessor Controls 287
ENGY-411 Advanced Heating System Design 287
ENGY-425 Building Management Systems 287
ENGY-430 Power Plant Operation 2 288
ENGY-435 HVAC Electrical Applications 288
ERDG-055 Reading 1 ESL 292
ERDG-081 ERCB English Reading Comprehension for Bilinguals Level 1 292

ERDG-084 English Reading Comprehension for Bilinguals Level 2 293
ERDG-087 English Reading Comprehension for Bilinguals (ERCB) 293
ERDG-089 ESL Reading 294
ESET-100 Introduction to Engineering Technologies 281
ESET-107 Introduction to Technology Systems 281
ESET-110 Basic Electronics 1 281
ESET-111 Introduction to CAET 281
ESET-115 Electronics Lab 1 281
ESET-140 Electrical Circuits 281
ESET-141 Electric Circuits 282
ESET-145 Electric Circuits Lab 282
ESET-150 Test and Measurement 282
ESET-210 Basic Electronics 2 282
ESET-211 Introduction to Electronics 282
ESET-215 Electronics Lab 2 282
ESET-220 Active Networks 1 282
ESET-226 Computer Applications 282
ESET-240 Automotive Electronics 1 283
ESET-250 Linear Electronics 1 283
ESET 255 Linear Electronics 2 283
ESET-260 Digital Systems 283
ESET-265 Digital Systems Lab 283
ESET-325 Digital Electronics 1 283
ESET-335 Digital Electronics 2 283
ESET-344 Communications Systems 1 284
ESET-345 Automotive Electronics 2 284
ESET-355 Devices, Circuits, and Systems 284
ESET-360 Mobile/Wireless 284
ESET-370 Data Acquisition/Control 284
ESET-410 Microcontroller/DSP Theory 284
ESET-443 Microprocessor Architecture and Systems 285
ESET-465 Senior Projects in ESET 285
ESET-470 Broadband Wireless Networks 285
ESET-475 RF/Wireless Systems Measurements 285
ESET-480 Electromagnetic Propagation and Transmission Lines 285
EWRT-088 Basic Writing Skills 1 294
EWRT-093 Basic Writing Skills 2 295
FINC-110 Introduction to Finance 244
FINC-310 Money and Banking 244
FINC-410 Investments 244
FINC-411 Managerial Finance 244
FIRE-125 Fire Protection and Fire Prevention 303
FIRE-210 Building Construction 303
FIRE-220 Organization and Management of Fire Departments 303
FIRE-310 Fire Hydraulics and Equipment 303
FIRE-330 Fire Protection Systems 304
FIRE-340 Fire Officership 304
FIRE-410 Hazardous Materials 304
FIRE-420 Fire Causes and Detection (Arson 1) 304
FIRE-430 Advanced Protection Systems 304
FIRE-498 Arson 2 304
FREN-124 Elementary French 1 304
FREN-224 Elementary French 2 305
FRES-099 Freshman Seminar 370
FRES-126 Study Skills Seminar—Module 1 370
FRES-160 College Success Seminar 370
GEOL-110 Environmental Geology 306

GRPH-122 Introduction to Prepress 306
GRPH-125 Typography and Layout 306
GRPH-131 Printing Technology 306
GRPH-145 Introduction to the Graphic Arts Computer 306
GRPH-170 Introduction to Digital Photography 307
GRPH-180 Professional Digital Photography 307
GRPH-200 Website Design and Development 307
GRPH-201 Interactive Media Design 307
GRPH-222 Image Assembly 307
GRPH-280 Advanced Digital Photography 307
GRPH-281 Advertising Photography 308
GRPH-282 Professional Digital Imaging Techniques 308
GRPH-283 Photographic Illustration 308
GRPH-323 Preflighting and Trapping 308
GRPH-360 Offset Presswork 308
GRPH-397 Graphic Arts Cooperative Education 309
GRPH-420 Color Reproduction Processes 309
GRPH-422 Color Management 309
GRPH-425 Color Reproduction 309
GRPH-445 Graphic Arts Portfolio Workshop 309
GRPH-455 Macintosh Operating Systems 310
GRPH-461 Electronic Publication 310
GRPH-462 Digital Imaging Preparation 310
GRPH-463 Digital Illustration Techniques 310
GRPH-464 Advanced Digital Image Preparation 310
GRPH-491 Photography and the Digital Darkroom 310
GRPH-497 Graphic Arts Cooperative Education 311
HCAR-110 Health Directions Seminar 332
HCAR-115 Health and Wellness 332
HCAR-120 Stress in Health and Disease 332
HCAR-200 Health Topics Seminar 332
HCAR-205 Medical Imaging and Computers 332
HCAR-220 Holistic Health and Wellness 332
HCAR-300 Current Issues Across the Continuum of Care 332
HCAR-350 Pathological Conditions 333
HCAR-430 Complementary Medical Therapy 333
HCAR-450 Healthcare Administration Practices 333
HIST-100 Survey of Early Western Civilization 366
HIST-110 Survey of Early U.S. History and Government 366
HIST-200 Survey of Modern Western Civilization 366
HIST-210 Survey of Modern U.S. History 366
HIST-300 History of Civilization to 1650 366
HIST-322 Introduction to African-American History: Colonial to 1865 366
HIST-323 Introduction to African-American History: 1865 - Present 366
HIST-400 History of Civilization Since 1650 367
HIST-425 Women in History 367
HIST-900 Directed Study in History 367
HONR-502 Philosophy of Science Colloquium 311
HONR-503 Library Research Colloquium 311
HONR-504 Humanities Colloquium: Arts in Action 311
HONR-505 The West in the 20th Century 311
HONR-506 Social Science Colloquium: American Biographies 312
HONR-507 From Side Streets to Skyscrapers: Literature and the City 312
HONR-508 Humanities Colloquium: The Comic Spirit 312
HONR-509 Entrepreneurship: Concept to Commercialization 312
INHC-110 Massage Techniques 1 329
INHC-210 Massage Techniques 2 329

INHC-301	Muscle Structure and Function	329
INHC-310	Massage Techniques 3	329
INHC-325	Medical Massage Therapy 1	329
INHC-350	Clinical Internship 1	329
INHC-400	Massage Techniques 4	330
INHC-412	Oriental Bodywork	330
INHC-425	Medical Massage Therapy 2	330
INHC-440	Asian Bodywork 1	330
INHC-441	Asian Bodywork 2	330
INHC-450	Clinical Internship 2	330
INHC-460	Botanical Medicine 1	331
INHC-461	Botanical Medicine 2	331
INHC-470	Aromatherapy 1	331
INHC-480	Color Therapy	331
ITAL-127	Elementary Italian 1	305
JOUR-309	Introduction to Journalism	297
JOUR-900	Directed Study - Journalism	299
LAND-111	Trees in the Landscape	333
LAND-120	Principles of Horticulture	333
LAND-210	Presentation Techniques	333
LAND-220	Turf Management	333
LAND-311	Shrubs in the Landscape	334
LAND-320	Landscape Practices	334
LAND-330	Landscape Design 1	334
LAND-350	Landscape Operations	334
LAND-410	Plant Propagation	334
LAND-420	Landscape Design 2	334
LAND-431	Earth Forms and Structures	334
LAND-450	Entomology/Disease Control	334
LECJ-100	Criminal Procedures 1	337
LECJ-110	Introduction to Criminal Justice	338
LECJ-200	Criminal Procedures 2	338
LECJ-230	Criminal Evidence	338
LECJ-300	Criminal Law 1	338
LECJ-340	Criminal Investigation	338
LECJ-400	Criminal Law 2	338
LECJ-411	Juvenile Procedures	338
LECJ-413	Parole, Probation & Rehabilitation	338
LECJ-450	Law Enforcement Management & Planning	339
LECJ-475	Law Enforcement Seminar	339
LEGL-306	Legal Terminology and Transcription	323
LEGL-406	Advanced Legal Transcription	323
LEGL-407	Legal Office Concepts and Procedures	324
LEOT-090	Lab and Laser Safety	335
LEOT-150	Introduction to Photonics	335
LEOT-322	Introduction to Lasers	335
LEOT-327	Laser Electronics 1	335
LEOT-330	Geometrical Optics	335
LEOT-345	Photonics	335
LEOT-349	Fiber Optic Communications	336
LEOT-350	Optical System Design	336
LEOT-352	Optical Test and Measurement	336
LEOT-375	Optics	336
LEOT-415	Laser Systems	336
LEOT-420	Wave Optics	336
LEOT-425	Industrial Laser Applications	336
LEOT-435	Fiber/Integrated Optics	337

LEOT-439	Optoelectronics	337
LEOT-442	Optical Component Fabrication and Assembly	337
LEOT-451	Advanced Topics in Lasers	337
LEOT-465	Senior Projects in LEOT	337
LIBR-100	Library Exploration	299
LIBR-101	Library Exploration/Educators	299
MANG-110	Principles of Management	245
MANG-310	Human Resource Management	245
MANG-312	Women, Management, and Leadership	245
MANG-335	Leadership	246
MANG-410	Labor Relations	246
MANG-427	Organizational Behavior	246
MAST-101	Medical Terminology 1	351
MAST-119	Applied Legal Concepts	351
MAST-122	Introduction To Medical Assisting	351
MAST-160	Medical Assistant Techniques 1	351
MAST-161	Medical Office Manager 1	351
MAST-206	Venipuncture/Phlebotomy	351
MAST-207	Venipuncture/Phlebotomy With Affiliation	352
MAST-210	Health Science 2	352
MAST-211	Health Science 3	352
MAST-215	Electrocardiography	352
MAST-216	Venipuncture/Phlebotomy	352
MAST-218	Lab Procedures for the Medical Assistant	352
MAST-220	Administrative Skills/Medical Assistant	352
MAST-260	Medical Assistant Techniques 2	333
MAST-261	Medical Office Manager 2	353
MAST-301	Introduction to Human Disease	353
MAST-319	Dosage and Calculations	353
MAST-321	Intro. to Pharmacology	353
MAST-450	Medical Assistant Techniques 3	353
MAST-460	Management Skills for the Medical Assistant	353
MATH-100	Elements of Mathematics	341
MATH-117	Contemporary Mathematical Applications	342
MATH-122	Applied Mathematics 1	342
MATH-124	Mathematics for a Technical Society	342
MATH-126	Expl. Foundations/Mathematical Reasoning	342
MATH-127	Mathematical Explorations	343
MATH-132	Technical Mathematics 1	343
MATH-145	Pre-Calculus Mathematics	343
MATH-155	Calculus 1	343
MATH-157	Calculus for Business, Life and Social Sciences 1	343
MATH-170	Programming with Mathematica	343
MATH-222	Applied Mathematics 2	344
MATH-232	Technical Mathematics 2	344
MATH-255	Calculus 2	344
M ATH-257	Calculus for Business, Life and Social Sciences 2	344
MATH-300, 301,302	Teaching Experience in Mathematics	344
MATH-355	Calculus 3	344
MATH-376	Discrete Structures	344
MATH-439	Linear Algebra	344
MATH-440	Linear Algebra Laboratory	345
MATH-455	Differential Equations	345
MECH-100	Introduction to CAD	345
MECH-110	Materials and Processing for World-Class Manufacturing	345
MECH-115	Intro. to EngineeringTechnology	345
MECH-150	Fundamentals of CNC	346

MECH-170 Fundamentals of AutoCAD 346
MECH-180 CAD 1: 2D Fundamentals 346
MECH-181 Engineering Drawing Practice 346
MECH-226 Metrology and Geometrics 346
MECH-230 CAD Level 1 347
MECH-250 CNC Applications 347
MECH-280 CAD 2: 3D Fundamentals 347
MECH-324 Statics and Strength of Materials 347
MECH-327 Quality Concepts 347
MECH-331 Statistical Quality Control 348
MECH-337 Computer-Aided Manufacturing 1 (CAM 1) 348
MECH-345 Machine Design 348
MECH-350 Mechanics of Statics 348
MECH-361 Strength of Materials 348
MECH-370 CAD 3: 3D Design 348
MECH-390 Materials and Manufacturing Processes 349
MECH-418 Automated Systems Lab 349
MECH-420 Fluid Mechanics 349
MECH-427 Advanced Quality Concepts 349
MECH-437 Computer-Aided Manufacturing 2 (CAM 2) 349
MECH-442 Manufacturing Planning and Control 349
MECH-447 Total Quality Management 350
MECH-455 CAD Level 4 350
MECH-466 Advanced CAD Applications 350
MECH-467 Advanced Engineering Applications 350
MECH-470 Introduction to Pro/Engineer 350
MECH-481 Senior Project 350
MEDC-103 Coding for the Health Sciences 322
MEDC-110 Introduction to Coding and Health Insurance 322
MEDC-120 Introduction to Diagnostic Coding 322
MEDC-121 Introduction to Procedural Coding 322
MEDC-218 Health Insurance and Reimbursement Management 322
MEDC-220 Technical Applications of Billing and Reimbursement Management .. 323
MEDC-301 Co-Op for Health Information Technologies 323
MEDC-305 Advanced Coding 323
MEDC-401 Health Information Management 323
MEDC-405 Certification Exam Preparation for Health Information Tech. 323
MOFF-300 Medical Office Management 324
MOFF-321 Medical Insurance and Reimbursement 324
MOFF-454 Medical Machine Transcription 324
MOFF-456 Advanced Medical Machine Transcription 324
MRKT-110 Principles of Marketing 248
MRKT-310 Retailing 248
MRKT-311 Advertising and Promotion 249
MRKT-312 Advertising Principles 249
MRKT-333 Marketing for the Internet 249
MRKT-410 Consumer Behavior 249
MRKT-411 Sales and Sales Management 249
MUSC-110 History of Music 354
MUSC-130 Music Appreciation 354
MUSC-133 Introduction to Piano and Theory 354
MUSC-234 Intermediate Piano and Theory 354
NMDT-102 Introduction to NMT 268
NMDT-103 Practicum 1 270
NMDT-105 Orientation to Practicum 268
NMDT-207 Practicum 2 270
NMDT-209 Practicum - Summer 1 270

NMDT-210	Nuclear Imaging of Organs	269
NMDT-212	Nuclear Cardiology	269
NMDT-301	Practicum 3	270
NMDT-306	Statistics and Instrumentation	269
NMDT-401	Practicum 4	270
NMDT-410	Practicum—Summer 2	270
NMDT-415	Independent Study	269
NMDT-417	Special Procedures in Nuclear Medicine	269
NURS-099	Basic Medication Calculations	355
NURS-102	Nursing 1	355
NURS-202	Nursing 2	355
NURS-302	Nursing 3	356
NURS-330	The Art of Healing	356
NURS-402	Nursing 4	356
NURS-403	Nursing Seminar	356
OCCP-100	Occupational Therapy Assistant 1	360
OCCP-200	Occupational Therapy Assistant 2	360
OCCP-201	Physical Pathology	360
OCCP-202	Movement and Function	360
OCCP-300	Occupational Therapy Assistant 3	360
OCCP-301	Psychosocial Pathology	361
OCCP-302	Occupational Therapy Media	361
OCCP-400	Occupational Therapy Assistant Seminar	361
OCCP-411	Occupational Therapy Assistant Practicum 1	361
OCCP-412	Occupational Therapy Assistant Practicum 2	361
OFFS-093	Introduction to Keyboarding -- ESL	324
OFFS-099	Computer Keyboarding for Health	325
OFFS-100	Basic Keyboarding Skills	325
OFFS-105	Communications /Editing	325
OFFS-116	Keyboarding Applications 1	325
OFFS-117	Office Procedures	325
OFFS-119	Fundamentals of Keyboarding	325
OFFS-120	Customer Relations	325
OFFS-125	Ten-Key Pad	325
OFFS-200	Keyboard Skill Building	326
OFFS-210	Communications/Editing 2	326
OFFS-215	Keyboarding Applications 2	326
OFFS-216	Administrative Management/Communications	326
OFFS-220	Introduction to Editing/Transcription	326
OFFS-225	Document Processing 1	326
OFFS-230	Medical Computer Applications	326
OFFS-245	Micronumerics	327
OFFS-260	Medical Word Processing	327
OFFS-300	Keyboard Speedbuilding and Applications	327
OFFS-304	Machine Transcription	327
OFFS-315	Keyboarding Applications 3	327
OFFS-325	Document Processing 2	327
OFFS-395	Office Information Tech. Internship	328
OFFS-397	Office Administration Cooperative Education	328
OFFS-401	Advanced Keyboarding	328
OFFS-410	Computer Integrated Systems 2	328
OFFS-495	Office Systems Internship	328
OFFS-497	Office Systems Cooperative Education	328
PHIL-110	Philosophy 1	357
PHIL-210	Philosophy 2	357
PHYS-104	Introduction to Astronomy	357
PHYS-119	Technical Physics	357

PHYS-125 Physical Science 358
PHYS-130 College Physics 1 358
PHYS-132 University Physics 1 358
PHYS-144 Survey of Astronomy 358
PHYS-230 College Physics 2 358
PHYS-232 University Physics 2 358
PHYS-256 Optics and Image Recording 359
PHYS-300 Radiologic Physics 1 359
PHYS-332 University Physics 3 359
PHYS-400 Nuclear Physics 359
PROG-102 RPG 315
PROG-106 Intro. to Structured Programming Using C 315
PROG-109 Information Systems Fundamentals 315
PROG-120 Introduction to Computer Applications in Telecommunications 316
PROG-130 Basic Computer Maintenance 316
PROG-140 Computer Maintenance 1 316
PROG-202 Advanced RPG 317
PROG-208 Visual Basic .NET1 317
PROG-240 Computer Maintenance 2 318
PROG-302 COBOL 1 318
PROG-308 Visual Basic.NET 2 318
PROG-313 Windows Operating Systems 318
PROG-314 Database Systems 318
PROG-315 Advanced Spreadsheets 319
PROG-325 Unix Operating Systems 319
PROG-350 Internet/Network Security 1 319
PROG-360 Advanced Unix Operating Systems 320
PROG-402 COBOL 2 320
PROG-404 Visual Basic.NET 3 320
PROG-406 C++ Programming 320
PROG-407 Java Programming 320
PROG-410 Systems Analysis & Design 320
PROG-412 Networks 1 321
PROG-413 Networks 2 321
PROG-414 Networks 3 321
PROG-416 Advanced Security Topics 321
PROG-420 Computer User Support 321
PROG-450 Internet/Network Security 2 322
PSCI-100 American Government and Politics 367
PSCI-250 International Relations 367
PSCI-300 Political Theory 1: From Plato to Hobbes 367
PSCI-330 Political Theory 2: 1600 to the Present 367
PSCI-900 Directed Study in Political Science 367
PSYC-100 General Psychology 368
PSYC-109 Human Relations 368
PSYC-305 Child Psychology 368
PSYC-325 Lifespan Human Growth and Development 368
PSYC-335 Theories of Personality 368
PSYC-350 Adolescent Psychology 368
PSYC-400 Principles of Normal/Abnormal Behavior 368
PSYC-900 Directed Study in Psychology 368
PTAS-100 Physical Therapist Assistant 1 361
PTAS-101 Introduction to Physical Therapy 362
PTAS-200 Kinesiology 362
PTAS-201 Physical Therapist Assistant 2 362
PTAS-202 Fundamentals of Measurement Skills 362

PTAS-306	Neurological Treatment Approaches/Integrated Practice	362
PTAS-307	Introductory Supervised Clinical Experience	362
PTAS-308	Orthopedic Treatment Procedure	362
PTAS-402	Physical Therapist Assistant Seminar	363
PTAS-403, 404	Supervised Clinical Experience	363
RADG-111	Radiographic Positioning 1	271
RADG-112	Image Production and Evaluation	271
RADG-116	Introduction to Clinical Practice	271
RADG-211	Radiographic Positioning 2	271
RADG-212	Equipment Operation and Maintenance	271
RADG-213, 214, 313, 415, 416	Clinical Practicum 1, 2, 3, 4, and 5	272
RADG-311	Special Procedures in Radiopharmaceuticals	272
RADG-314	Radiographic Positioning 3	272
RADG-413	Seminar/Quality Control	272
RADG-418	Radiation Protection and Biology	272
RSPC-104	Introduction to Respiratory Care	363
RSPC-105	Respiratory Care 1	363
RSPC-205	Respiratory Care 2	363
RSPC-207	Respiratory Care 3	364
RSPC-215	Respiratory Care 4	364
RSPC-216	Respiratory Care Practicum	364
RSPC-303	Intensive Respiratory Care	364
RSPC-305	Pulmonary Function Testing	364
RSPC-306	Respiratory Care Application/Clinical Sciences 1	364
RSPC-310	Respiratory Care 5	364
RSPC-311	Respiratory Care Practicum	364
RSPC-408	Respiratory Care 6	364
RSPC-409	Neonatal/Pediatric Care	364
RSPC-410	Respiratory Care Practicum	365
RSPC-411	Respiratory Care Application and Clinical Sciences 2	365
SMBE-112	Small Business Marketing	247
SMBE-116	Introduction to Small Business Management	247
SMBE-124	Exploration of Entrepreneurship	247
SMBE-125	Introduction to Entrepreneurship	247
SMBE-343	Small Business Seminar	248
SMBE-421	Small Business Formation	246
SMBE-440	Entrepreneurial Field Studies	248
SOCL-100	Introduction to Sociology	369
SOCL-110	Introduction to Anthropology	369
SOCL-200	Social Problems	369
SOCL-250	Sociology of the Family	369
SOCL-301	Race and Ethnic Relations	369
SOCL-900	Directed Study in Sociology/Anthropology	369
SPAN-121	Elementary Spanish 1	305
SPAN-221	Elementary Spanish 2	305
SPAN-321	Intermediate Spanish 1	305
SPCH-203	Fundamentals of Speech	296
STAT-142	Statistics	343
SURG-104	Introduction to Surgical Technology	370
SURG-204	Principles and Practices of Surgical Technology	371
SURG-207	Practices Common to Surgical Procedures	371
SURG-208	Clinical Practice in Surgery 1	371
SURG-306	Health Problems and Surgical Specialties 1	371
SURG-307	Clinical Practice in Surgery 2	371
SURG-308	Pharmacology and Pathology	372
SURG-309	Role of the Surgical Technologist 1	372
SURG-403	Role of the Surgical Technologist 2	372

SURG-408	Health Problems and Surgical Specialties 2	372
SURG-409	Clinical Practice in Surgery 3	372
TCOM-140	Electrical Circuit Theory	372
TCOM-150	Introduction to Telecommunications	373
TCOM-210	Intro. to Telecommunication Networks	373
TCOM-310	Telecommunications 1	373
TCOM-315	Physical Layer Telecommunications Systems	373
TCOM-320	Telecommunications 2	373
TCOM-330	Telecommunications Electronics	373
TCOM-410	Telecommunications 3	374
TCOM-415	Broadband Telecommunications Systems	374
TCOM-420	Telecommunications 4	374
TCOM-430	Lightwave Communication	374
THTR-310-312	College Theater Workshop 1, 2, & 3	297
TPRD-100	Introduction to Multimedia	274
TPRD-112	Writing for Electronic Media	274
TPRD-125	Intro. to Video Production	274
TPRD-140	Introduction to Mass Communication	274
TPRD-200	Internet Multimedia	274
TPRD-210	Advanced TV Writing	275
TPRD-220	Digital Film Making	275
TRPD-230	Speaking on TV	275
TPRD-240	Film Structure and Analysis	275
TPRD-310	Advanced Video Production	275
TPRD-322	TV Journalism	275
TPRD-331	TV Production Practicum	276
TPRD-350	Advanced Digital Video Editing	276
TPRD-351	Visual Quality and Aesthetics	276
TPRD-352	Digital Sound and Video Design	276
TPRD-422	TV News Production	276
TPRD-440	Digital Video Portfolio	276
TPRD-451	Interactive Multimedia Design	277
TPRD-452	Multimedia Interactive Authoring	277
TPRD-453	Digital Animation	277
WEBS-100	Internet Certification	315
WEBS-324	Web Authoring	319
WEBS-326	Website Management With Database Integration	319
WEBS-328	Web Scripting	319
WEBS-424	Advanced Web Authoring	321
WRIT-202	Technical Report Writing	296

Directions to STCC

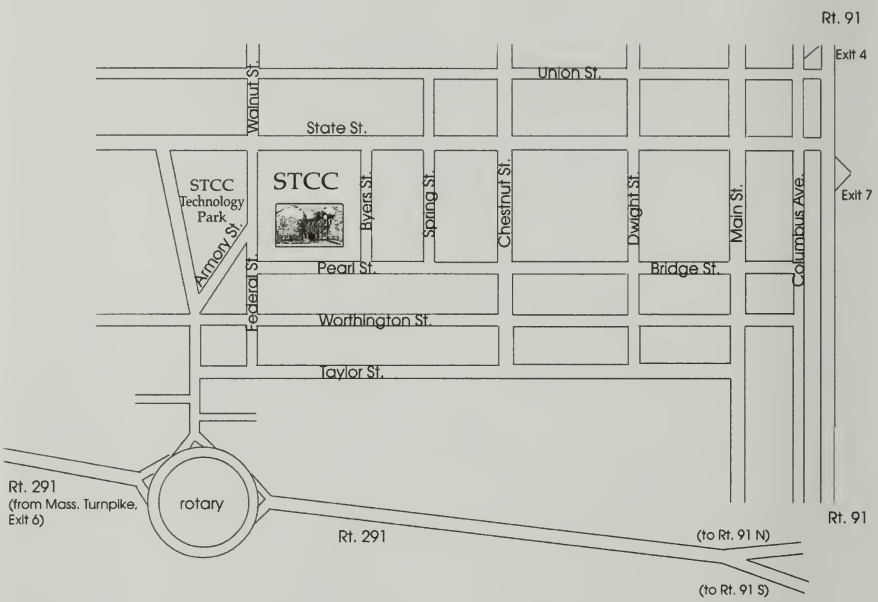

From Route 91 (north or south)

Take Exit 8 to Route 291.
Get into the right lane.
Take Exit 3, Armory Street.
At the end of the ramp, get into the right lane at the traffic light.
Go straight from the light and then turn right onto Armory Street south.
At the 3rd light, turn right onto Taylor Street.
Take immediate left onto Federal Street.
Go about 4/10 of a mile and turn right into STCC's main gate.

From Massachusetts Turnpike

Take Exit 6, Springfield.
Turn left onto Route 291
Take Armory Street exit.
Go 3/4 of the way around the rotary and take Armory Street south
At 3rd light, turn right onto Taylor Street.
Take immediate left onto Federal Street.
Go about 4/10 of a mile and turn right into STCC's main gate.

Parking

Campus police will direct you to appropriate parking area.

Campus Map

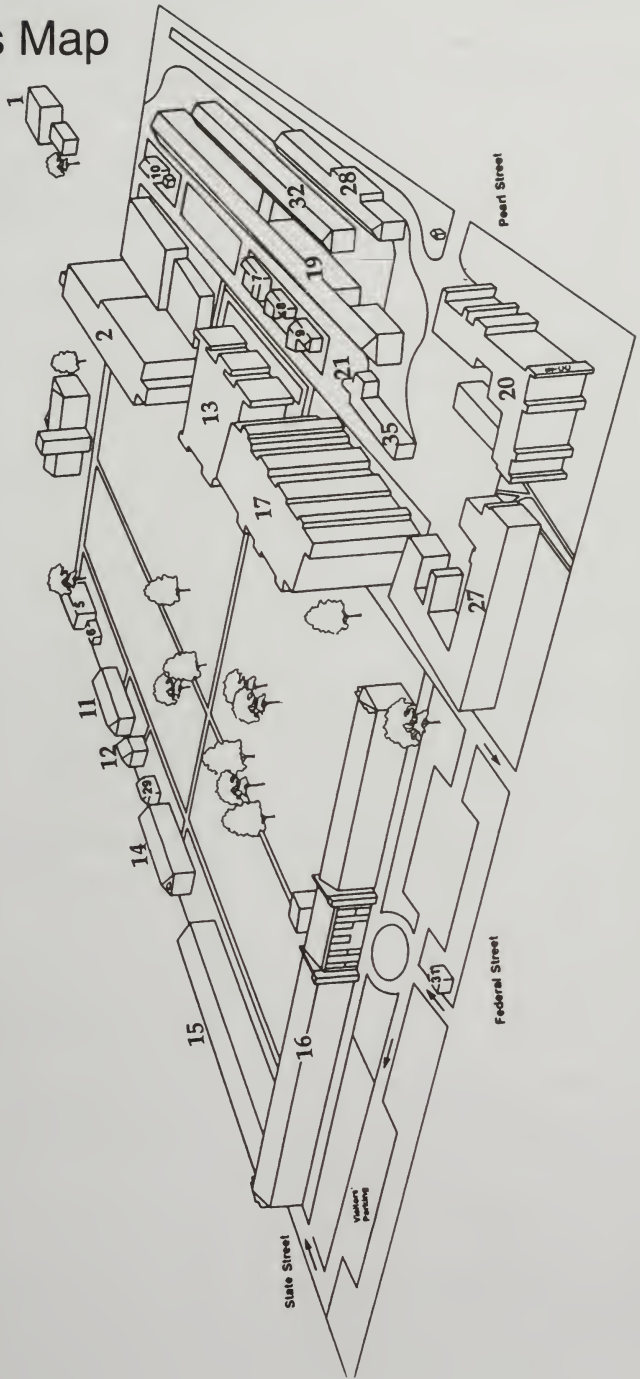
1
2
5
6
7
8
9
10
11
12
13
14
15
16
17
19
20
21
27
28
29
31
32
35
Pearl Street
Federal Street
State Street
Visitors' Parking

Map Legend

Springfield Armory National Historic Site, under jurisdiction of National Park Service
1 Commanding Officer's Quarters
Armory Museum

STCC campus
2 SCIBELLI HALL
Administrative Computer Center
Athletics
Biological Sciences
Biotechnology
Business Administration
Computer Information Technologies
Conference Center
Digital Media Production
Exercise Room
Gallery Players
Gallery Snack Bar
Greenhouse
Gymnasium
Health Information Technologies
Office Information Technologies
Student Computer Labs
Theater
Weight Room
7 Facilities Office
8 Professional Development Center
9 Campus Police
11 Municipal Police Training Committee
12 Vice President, Administration/CFO
13 DELISO HALL
Developmental English
Early Childhood Education
English
English As a Second Language
Humanities Computer Lab
Media Production Center
Music
14 Armory Square Child Care Center
Graphic Arts Technology
15 GARVEY HALL SOUTH
Bursar's Office
Cashier
Registrar
Veterans' Affairs
16 GARVEY HALL
Academic Affairs
Administrative Services
Admissions
Affirmative Action Office
Bilingual Services
Business Office
Enrollment Management
Financial Aid
Foundation
Human Resources
President
Radio Station WTCC
University Without Walls
Vending food area
17 PUTNAM HALL
Chemistry
Civil Engineering Technology
Computer Systems Engineering Technology
Computer Science Transfer
Economics
Electronic Systems Engineering Technology
Engineering and Science Transfer
General Studies
History
Individualized Learning Center
Landscape Design and Management Technology
Laser Electro-Optics Technology
Law Enforcement/Criminal Justice
Liberal Arts Transfer
Mathematics
Mechanical Engineering Technology
Physics
Psychology
Sociology and Anthropology
Student Activities and Development
Student Government Association
Telecommunications Technology
20 HEALTH PROFESSIONS BUILDING
Cafeteria
Campus Store
Clinical Laboratory Science
Cosmetology
Dental Assistant
Dental Hygiene
Electrical Engineering Technology
Health Services
Medical Assistant
Massage Therapy
Nuclear Medicine
Nursing
Occupational Therapy Assistant
Physical Therapist Assistant
Radiography
Respiratory Care
Sonography
Surgical Technology
21 Plant Growth Room
25 Automotive Technology
27 ABE Center
Career Services
Cooperative Education
Counseling Center
Disability Services
Library
Returning Adult Services
Storekeeper and Maintenance Shops
Student Success Center
Student Support Services
Transfer Affairs
28 Amy H. Carberry Fine Arts Gallery
Visual and Performing Arts
31 Gatehouse
32 Energy Systems Technology
35 Civil Engineering Lab
Plant Science Lab

STCC TECHNOLOGY PARK
Andrew M. Scibelli Enterprise Center
Center for Business & Technology
Div. of Economic and Bus. Development
Mechanical Engineering Technology
National Center for Telecommunications Technologies
Springfield Business Incubator
Student Business Incubator
STCC Entrepreneurial Institute
Verizon New England Next Step Program

General Index

Ability to Benefit 20
AcademicAdvising 50
Academic Honesty Policy 68
Academic Year 52
Academic Standing 35, 54
Access Grant 29
Accreditation 11
Add/Drop 56
Additional Costs 30
Administrative Directory 378
Admission 19
Advanced Placement 24
Alcohol Policy 69
Alpha Beta Gamma Business Honor Society 58
American International College 43
Application Procedure (Admissions) 20
Application Procedure (Financial Aid) 32
Art Gallery 60
Articulation Agreements (2+2) 24
Athletics 60
Attendance Policy 56
Auditing of Classes 57
Awards and Scholarships 58

Bay Path College 44
Bilingual Program 51
Board of Higher Education 377
Board of Trustees 376
Books and Supplies 30
Bookstore 60

CLEP Examinations 24
CORI 90
Campus Store 60
Career Counseling 62
Career Programs 6, 40
Career Services 61
Center for Business and Technology 93
Certificate of Completion Programs 40
Certificate Programs 40
Certification Exam Results 12
Challenge Examinations 24
Child Care 65
Class Schedule 53
Clinical Faculty 399
Commencement Honors 59
Commonwealth Transfer Compact 42
Computing Services 60
Confidentiality of Student Records 88
Continuing Education 91
Cooperating Colleges of Greater Springfield 15
Cooperative Education 49
Counseling Center 61
Counseling Records 64, 89
Course Changes 56
Curricula of the College 94

Dean's List 58
Deliso, Joseph J., Videoconference Center 13
Department Chairs/Program Coordinators 380
Department/Program Changes 23
Developmental Courses 55
Developmental Education 47
Direct Student Loan 33
Directed Study 57
Disability Services 65
Disciplinary Procedures 72
Discover 63
Disruptive Behavior 79
Distance Education 41
Drug and Alcohol Policy 69

Educational Counseling 64
English As a Second Language 48
Entrance Assessment 21
Entrepreneurial Institute 15
Examinations and Grades 53

FERPA 88
Faculty and Administration 381
Financial Aid 32
Financial Balances 27
Foundation 17
Fresh Start Status 23, 36

General Education 47
General Education Fee 27
Governance of the College 9
Grade Appeals (Grievance Proc.) 85
Graduation Rate 59
Graduation Requirements 46
Grievance Procedure 83

Health Insurance 27
Health Services 65
History of the College 8
Home Schooling Policy 19
Honors Certificate Program 48
Hope Scholarship 29
Housing 66

Immunization Law 22
Insurance 27
International Student Information 20
Internet Policy 73
Internship 49
Interviews (Admissions) 20
Intra-College Transfer 23

Joint Admission 42
Judicial Policies 79

Library 51
Lifetime Learning 29

Make-Up Examinations 56
Mass. Access Grant 34
Massachusetts Grant 34
Medical Records 89
Messages 66
Mid-Semester Grades 56
Mission of the College 10

National Center for Telecommunications Technologies 14
New England Next Step Program 14
New England Regional Student Program 28
Non-Graduate Participation at Commencement 46

Out-of-State Student Information 20
Ovations 66
Overview of the College 6

Parent Loan 33
Parking 66
Part-time Faculty 394
Part-time Grant 34
Payment of Bills 27
Pell Grant 33
Personal Counseling 64
Phi Theta Kappa Honor Society 58
Philosophy of the College 10
Placement Testing 21
Pluralism Policy 17
Prerequisites for Admission 25
President's Message 4
Professional Development Center 17
Program Changes 23

ROTC 16
Racial, Ethnic, and Religious Hatred 17
Re-Admission 23
Reading Policy 21
Refund (Tuition) 29
Registration Process 53
Repetition of Courses 57

INDEX

Replacement of Diploma 57
Resident Status 28
Returning Adult Services 66

SORI 90
Satisfactory Academic Progress 35
Scholarships 58
School of Continuing Education 91
Scibelli Enterprise Center 13, 14
Senior Citizen Exemption 28
Sex Offender Notification 18
Sexual Harassment Policy 17
Shared Governance 9
Springfield Business Incubator 14
Student Activities and Development 67
Student Code of Conduct 75
Student Rights and Responsibilities 67
Student Success Center 52
Student Support Services Program 52
Supplemental Educational Opportunity Grant 33

Talent Roster of Outstanding Transfer Students 58
Tech Prep 24
Technical Standards 22
Technology Park 13
Technology Resources Policy 71
Testing and Assessment Center 47
Transfer Articulation Agreements 44
Transfer Counseling 41
Transfer Into STCC 23
Transfer Programs 7, 41
Tuition and Fees 27, 31
Tuition Advantage 29, 42
Tuition Refunds 29
Tuition Waiver 34, 39
Tutorial Assistance Program 52

University of Massachusetts 45
University Without Walls 45, 204

Values of the College 10
Veterans' Information 38
Videoconference Center 13
Vision Statement 10

Western New England College 43
Withdrawal From a Course 57
Withdrawal From College 57
Work-Study Program 33

Statement of Nondiscrimination
Springfield Technical Community College is an Affirmative Action/Equal Opportunity Employer and does not discriminate on the basis of race, color, national origin, sex, sexual orientation, age, religion, or disability in its educational programs or in admission to, access to, treatment in, or employment in, its programs or activities as required by Title VI, Civil Rights Act of 1964; Title IX, Educational Amendments of 1972; and Section 504 of the Rehabilitation Act of 1973; and regulations promulgated thereunder 34 C.F.R. Part 100 (Title VI), 34 C.F.R. Part 104 (Section 504), 34 C.F.R. Part 106 (Title IX), and M.G.L. c 516. All inquiries concerning application of the above should be directed to the Affirmative Action Officer and Title IX Coordinator, or the Section 504 Coordinator.

Americans with Disabilities Act
Springfield Technical Community College advises applicants, participants, and the public that it does not discriminate on the basis of disability in admission or access to, or treatment or employment in its programs, services and activities. Inquiries, requests and complaints should be directed to the ADA Coordinator, STCC, One Armory Square, Building 27, Room 258, Springfield, MA 01105. The telephone number is 755-4785.

Student Right to Know Disclosure
Notice is hereby given that, in accordance with the Student Right to Know Act (Title I of Public Law 101-542), the graduation rates of degree-seeking, full-time students are available to all current or prospective students from the Office of the Registrar, and will be provided upon request.

Campus Safety Disclosure
Notice is hereby given that, in accordance with the Student Right to Know Act (Title II of Public Law 101-542), the Uniform Campus Crime Report from Springfield Technical Community College is available from the College's Office of Campus Safety, and will be provided upon request.

Smoke-Free Buildings
All buildings at Springfield Technical Community College are smoke-free. Designated sites for smoking are located outside all campus buildings.

Information Subject to Change

This handbook is published as a convenient source of information for prospective students and for the general public. To allow for unforeseen developments that may occur along budgetary or other lines, the College reserves the right to add or delete courses and programs or to revise tuition, fees, and insurance requirements described herein.

www.stcc.edu

Springfield Technical Community College

One Armory Square, Suite 1
P.O. Box 9000
Springfield, MA 01102-9000
413-755-3333
AdmissionsInfo@stcc.edu